SOD CUTTER

ORIGINAL LANGUAGE INSTRUCTIONS

SC-18AHD
SC-18AHD/5.5K

PARTS,OPERATORS & SAFETY MANUAL

MAN 4177150
Rev. C

CALIFORNIA PROPOSITION 65

WARNING: Cancer and Reproductive Harm - www.P65Warnings.ca.gov.

ADVERTENCIA: Cáncer y Dãno Reproductivo - www.65Warnings.ca.gov.

WARNING

The engine exhaust from this product contains chemicals known to the State of California to cause cancer, birth defects or other reproductive harm.

ADVERTENCIA

El estado de California hace saber que los gases de escape de este producto contienen productos qu mi-cos que producen c ncer, defectos de nacimiento y otros da os en el proceso de reproducci n humana.

IMPORTANT!

It is a violation of California Public Resource Code Section 4442 or 4443 to use or operate the engine on any forest-covered, brush-covered or grass-covered land unless the engine is equipped with a spark arrestor, as defined in Section 4442, maintained in effective working order or the engine is constructed, equipped, and maintained for the prevention of fire.

To acquire a spark arrestor for your unit, see your Engine Service Dealer.

Please refer to the engine manufacturer's information included with the machine.

Labeled power ratings are supplied by the engine manufacturer in accordance with SAE testing and gross/net power rating standards (J1940, J1995, J1349).

IMPORTANT MESSAGE

Thank you for purchasing this Classen product. You have purchased a world class product, one of the best designed and built anywhere.

This machine comes with an Operation and Safety Manual, Parts and Service Manual, and Engine Manual. The useful life and good service you receive from this machine depends to a large extent on how well you read and understand these manuals. Treat your machine properly, lubricate and adjust it as instructed, and it will give you many years of reliable service.

Your safe use of this Classen product is one of our prime design objectives. Many safety features are built in, but we also rely on your good sense and care to achieve accident-free operation. For best protection, study the manuals thoroughly. Learn the proper operation of all controls. Observe all safety precautions. Follow all instructions and warnings completely. Do not remove or defeat any safety features. Make sure those who operate this machine are as well informed and careful in its use as you are.

See a Classen dealer for any service or parts needed. Classen service ensures that you continue to receive the best results possible from Classen products. You can trust Classen replacement parts because they are manufactured with the same high precision and quality as the original parts.

Classen designs and builds its equipment to serve many years in a safe and productive manner. For longest life, use this machine only as directed in the manuals, keep it in good repair and follow safety warnings and instructions. You'll always be glad you did.

Classen
Schiller Grounds Care, Inc.
1028 Street Road
Southampton, PA 18966-4217

TABLE OF CONTENTS

	FIGURES	PAGE
INTRODUCTION / SET-UP INSTRUCTIONS		5
SAFETY		6-8
LABELS		9
CONTROLS		10
OPERATION		11, 12
MAINTENANCE		13
STORAGE		14
TROUBLESHOOTING		15
SPECIFICATIONS		16
PARTS SECTION		17
MAIN FRAME ASSEMBLY	FIGURE 1	18, 19
HANDLE ASSEMBLY	FIGURE 2	20, 21
POWER TRAIN ASSEMBLY	FIGURE 3	22, 23
WARRANTY		BACK COVER

This Operator / Parts Manual is part of the machine. Suppliers of both new and second-hand machines must make sure that this manual is provided with the machine.

NOTICE !!!

Unauthorized modifications may present **extreme** safety hazards to operators and bystanders and could also result in product damage.

Schiller Grounds Care, Inc. strongly warns against, rejects and disclaims any modifications, add-on accessories or product alterations that are not designed, developed, tested and approved by Schiller Grounds Care, Inc. Engineering Department. Any Schiller Grounds Care, Inc. product that is altered, modified or changed in any manner not specifically authorized after original manufacture–including the addition of “after-market” accessories or component parts not specifically approved by Schiller Grounds Care, Inc. will result in the Schiller Grounds Care, Inc. Warranty being voided.

Any and all liability for personal injury and/or property damage caused by any unauthorized modifications, add-on accessories or products not approved by Schiller Grounds Care, Inc. will be considered the responsibility of the individual(s) or company designing and/or making such changes. Schiller Grounds Care, Inc. will vigorously pursue full indemnification and costs from any party responsible for such unauthorized post-manufacture modifications and/or accessories should personal injury and/or property damage result.

This symbol means:
ATTENTION!
BECOME ALERT!

Your safety and the safety of others is involved.

Signal word definitions:

The signal words below are used to identify levels of hazard seriousness. These words appear in this manual and on the safety labels attached to Schiller Grounds Care, Inc. machines. For your safety and the safety of others, read and follow the information given with these signal words and/or the symbol shown above.

⚠DANGER

DANGER indicates a hazardous situation which, if not avoided, **WILL** result in death or serious injury.

⚠WARNING

WARNING indicates a hazardous situation which, if not avoided, **COULD** result in death or serious injury.

⚠CAUTION

CAUTION indicates a hazardous situation which, if not avoided, **COULD** result in minor or moderate injury. It may also be used to alert against unsafe practices or property damage.

⚠CAUTION

CAUTION used without the safety alert symbol indicates a potentially hazardous situation which, if not avoided, **MAY** result in property damage.

SCHILLER GROUNDS CARE, INC.
1028 Street Rd.
Southampton, PA 18966
MODEL NUMBER

SERIAL NUMBER
MFG. DATE:

MODEL NUMBER: This number appears on sales literature, technical manuals and price lists.

SERIAL NUMBER: This number appears only on your machine. It contains the model number followed consecutively by the serial number. Use this number when ordering parts or seeking warranty information.

Thank You

Thank you for purchasing the Classen Model SC-18AHD

Read This Manual

Read this manual carefully to learn how to operate sod cutter correctly. Failure to do so could result in personal injury or equipment damage.
This manual should be considered a permanent part of your sod cutter and should remain with it if you sell it.

Warranty

Refer to back page.

Serial Numbers

Write frame and engine serial numbers, plus model numbers in “Owners Record” section below. Your dealer needs these numbers when you order parts. The serial number is located on a sticker on the center section of the frame.

Directions

“Right Hand” and “Left Hand” sides of the sod cutter are determined by facing the back of the sod cutter as you would operate the machine.

PRE-DELIVERY CHECK LIST

Check the following before you deliver the sod cutter to the customer.

1. Guards and shields fastened in place.
2. Decals fastened and legible.
3. Tire pressure.
4. Gas lever on engine turned on.
5. All eight lubrication points greased.
6. 2:1 gearbox oil level.
7. Engine oil level.
8. Air cleaner.
9. Touch up scratches.
10. Chain tight.
11. Engine belt tight.
12. Levers working properly.
13. All controls.
14. Add fuel, start engine, test run.

DELIVERY CHECK LIST

Review the operators manual with the customer. Explain the following:

1. Classen Mfg., Inc. warranty.
2. Safe operation and service.
3. How to use controls.
4. Operating the machine correctly.
5. Transporting the sod cutter.
6. Correct fuel and lubricants.
7. Daily and periodic inspections.
8. Changing oil after break-in period.
9. Servicing the sod cutter regularly and correctly.
10. Classen Mfg., Inc. parts and service.
11. Give the customer the operators manual and encourage customer to read it.

SET UP INSTRUCTIONS

To prevent injury, wear appropriate eye protection and stand clear when cutting banding. Banding is under tension and may snap back when cut.

1. Remove crate top, ends, sides and plastic cover-ing the unit.
   Remove the banding attaching the sod cutter to the pallet.

2. Roll the sod cutter off the pallet. The unit can also be driven off the pallet, but first read the Safety, Controls, and Operation sections of your manual, then check the oil and add fuel.

3. Dispose of pallet, box, and banding in a responsible manner.

Machine Preparation

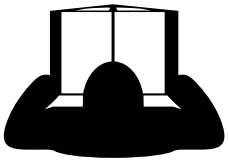

Operator preparation and training

Read the Operation & Safety Manual

- If an operator or mechanic cannot read English, it is the owner's responsibility to explain this material to them. If any portion of this material is unclear, contact your factory representative for clarification.
- Become familiar with the safe operation of the equipment, operator controls and safety signs. Be prepared to stop the engine quickly in an emergency. Do not operate or allow another person to operate this machine if there are any questions about safety.
- All operators and mechanics should be trained. The owner is responsible for training the users.
- Wear appropriate clothing, including safety goggles or safety glasses with side shields when operating. Do not operate barefoot or wearing open sandals. Long hair, loose clothing or jewelry may get tangled in moving parts.
- Wear hearing protection.
- Wear safety glasses.
- Never allow underage children, unskilled or improperly trained people to operate this equipment. Local regulations can restrict the age of the operator.
- Keep warning labels and this operator's manual legible and intact. Replacement labels and manuals are available from the factory.
- Do not operate machine while under the influence of drugs or alcohol.
- The owner/user can prevent and is responsible for accidents or injuries occurring to themselves, other people or property.

Site preparation and circumstances

- Evaluate the terrain to determine how to safely perform the job. Only use accessories and attachments approved by the manufacturer.
- Clear the area to be cut of objects such as rocks, toys, wire or other debris that may be thrown or get tangled in the sod cutter.
- Identify and mark objects to be avoided such as sprinkler heads, stakes, water valves, etc.
- Be sure the area is clear of pets and people, especially young children. Never assume they will remain where you last saw them. Stop the machine if any enter the area.
- Cut sod only in daylight or in good artificial light.

Machine Preparation

- Do not tamper with or defeat safety devices. Keep guards, shields and interlock safety devices in place and in proper working condition. They are for your protection.
- Keep all fasteners such as nuts, bolts and pins well secured.
- Visually inspect blade and blade bolts for wear or damage. Replace worn or damaged blades and bolts.
- Verify that machine and attachments, if any, are in good operating condition.
- Do not engage blade until ready to cut sod.

OPERATING SAFELY

In General

- Use extra care when loading or unloading the machine into a trailer or truck.
- Use caution when making turns and crossing roads and sidewalks. Stop blade when not cutting sod.
- Do not run the engine in an enclosed area where dangerous carbon monoxide fumes can collect.
- Never leave a machine unattended. Always turn off blade and stop engine when leaving the operator position. When leaving the machine be sure the wheel drive clutch is engaged.
- Use extreme caution when reversing or pulling machine towards you.

Storage Safety

- Stop the engine and allow to cool before storing.
- Drain the fuel tank outdoors only.
- Store fuel in an approved container in a cool, dry place.
- Keep the machine and fuel containers in a locked storage place to prevent tampering and to keep children from playing with them.
- Do not store the machine or fuel container near heating appliances with an open flame, such as a water heater, or an appliance with a pilot light.
- Keep gasoline storage area free of grass, leaves and excessive grease to reduce fire hazard.
- Clean grass and debris from cutting units, drives, mufflers and engine to help prevent fires.

Starting

- Start according to instructions in this manual or on the machine.
- Before attempting to start the engine, make sure the wheel drive and cutter blade are disengaged.
- When starting the engine, make sure hands and feet are clear of the blade.
- Do not change engine governor settings or overspeed the engine. Operating the engine at excessive speed can increase the hazard of personal injury.

Operating On Slopes

Use Extra Care When Working On Slopes

- Do not operate on slopes if uneasy or uncertain. Ultimate responsibility for safe operation on slopes rests with the operator.
- Do not operate on steep slopes.
- Keep all movement on slopes slow and gradual.
- Do not cut sod near drop-offs, ditches or embankments. The machine could suddenly turn over if a wheel runs over the edge or an edge caves in.
- Do not turn on slopes unless necessary, and then turn slowly and downhill when possible.
- Be sure of your footing on slopes.

Interrupting Operation

- Before leaving the operator's position:
  — Park on level ground.
  — Disengage the wheel drive and cutter blade.
  — Shut off the engine.
- Disengage the wheel drive and wait until the blade stops moving then disengage the blade:
  — when not cutting sod;
  — for transport;
  — when crossing surfaces other than grass.
- Stop the engine, disengage the wheel drive and wait until the blade stops moving:
  — before refueling;
  — before making blade adjustment.
- Stop the engine, disengage the wheel drive, and disconnect the spark plug wire(s):
  — before clearing blockages;
  — before checking, cleaning or working on the machine;
  — after striking a foreign object. Inspect the machine for damage and make repairs before restarting;
  — if the machine begins to vibrate abnormally: shut off machine immediately. Inspect and make repairs as needed before restarting;
  — except for repairs or adjustments as specifically noted, such as for carburetor adjustment, where the engine must be running. Keep hands and feet clear of moving parts in these circumstances.
- Allow the blade to come to a complete stop when stopping operation to clear blockages, unclog, inspect the machine, do maintenance or repair.
- Reduce the throttle setting during engine shutdown and, if the engine is provided with a shut-off valve, turn the fuel off at the conclusion of operation.

MAINTENANCE SAFETY

In general

- Maintain machine according to manufacturer's schedule and instructions for maximum safety and best results.
- Park machine on level ground.
- Never allow untrained personnel to service machine.
- Guards should only be removed by qualified maintenance technician for maintenance/service. Replace when work is complete.
- Adjust or repair only after the engine has been stopped and the blade has stopped moving.
- Disconnect spark plug wire(s) before doing any maintenance.
- Replace parts if worn, damaged or faulty. For best results, always replace with parts recommended by the manufacturer.
- Do not dismantle the machine without releasing or restraining forces which may cause parts to move suddenly.
- Provide adequate support, e.g. jack stands for lifted machine or parts if working beneath.
- Do not put hands or feet near or under rotating parts.
- Clean up spilled oil or fuel thoroughly.
- Replace faulty mufflers.
- To reduce fire hazards, keep the engine, muffler, and fuel storage area free of grass, leaves, debris buildup or grease.

Blades

The sod cutter blade is sharp and can cut. Use extra caution when handling. Remove obstructions with care. Wrap the blade or wear gloves.

- Only replace blade. Never straighten or weld.
- Keep other persons away from blades.

Fuel

- Petrol (gasoline) and diesel fuels are flammable; petrol (gasoline) vapors are explosive. Use extra care when handling.
- Store only in containers specifically designed for fuel.
- When refueling or checking fuel level:
- Stop the engine and allow to cool;
- Do not smoke;
- Refuel outdoors only;
- Use a funnel;
- Do not overfill;
- If fuel is spilled, do not attempt to start the engine until the spill is cleaned up and vapors have cleared.
- Replace caps on fuel containers and tanks securely.

Sparks from static electricity can start fires or cause explosions. Flowing fuel can generate static electricity. To prevent static electricity sparks:

- Keep fuel containers electrically grounded. Do not fill containers in a vehicle or on a truck or trailer bed with a plastic liner. Fill containers on the ground away from the vehicle.
- When practical, remove petrol (gas) powered equipment from the truck or trailer and refuel it on the ground. If equipment must be refueled on the truck or trailer, refuel from a portable container rather than a dispenser nozzle.
- Keep the dispenser nozzle in contact with the rim of the fuel tank or container opening until fueling is complete. Do not use a nozzle lock-open device.

Storage Safety

- Stop the engine and allow to cool before storing.
- Drain the fuel tank outdoors only.
- Store fuel in an approved container in a cool, dry place.
- Keep the machine and fuel containers in a locked storage place to prevent tampering and to keep children from playing with them.
- Do not store the machine or fuel container near heating appliances with an open flame, such as a water heater, or an appliance with a pilot light.
- Keep gasoline (petrol) storage area free of grass, leaves and excessive grease to reduce fire hazard.
- Clean grass and debris from cutting units, drives, mufflers and engine to help prevent fires.

SC-18A

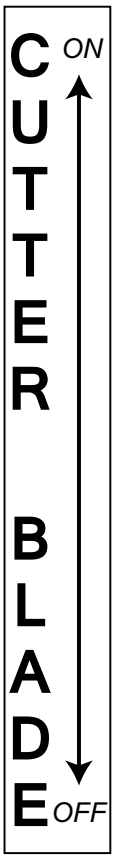

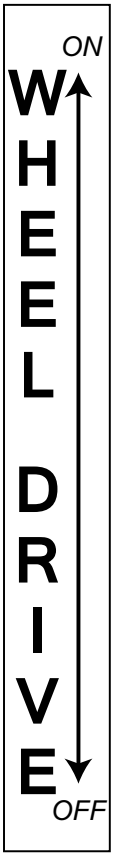

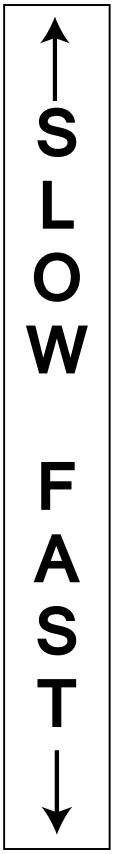

WARNING

Operation of This Equipment May Create Sparks That Can Start Fires Around Dry Vegetation. A Spark Arrestor May be Required. The Operator Should Contact Local Fire Agencies For Laws or Regulations Relating to Fire Prevention Requirements.

--This label meets California 4442.6

100504

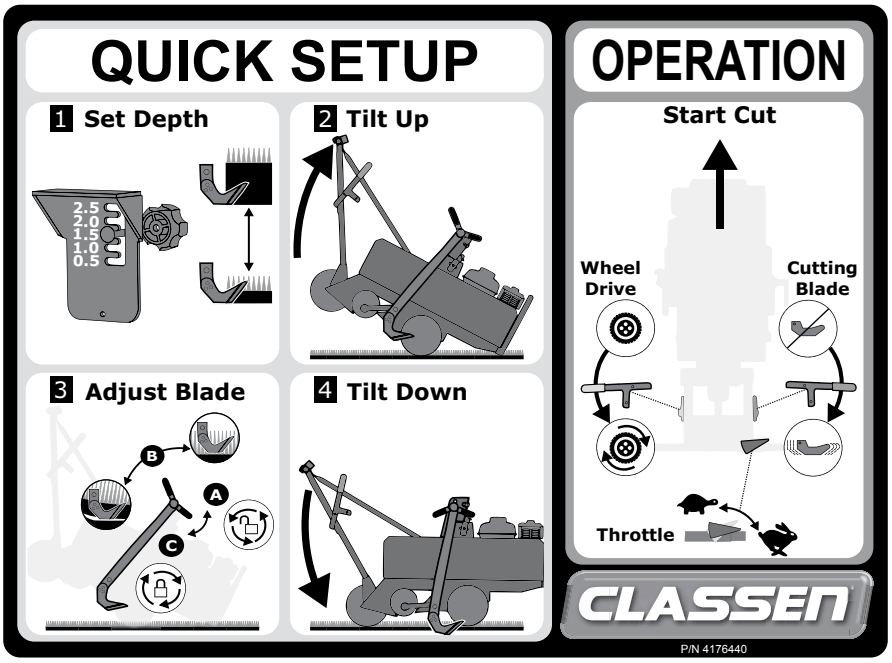

LUBRICATE CHAIN DAILY, ALSO CHECK TENSION AND ADJUST WHEN NEEDED.

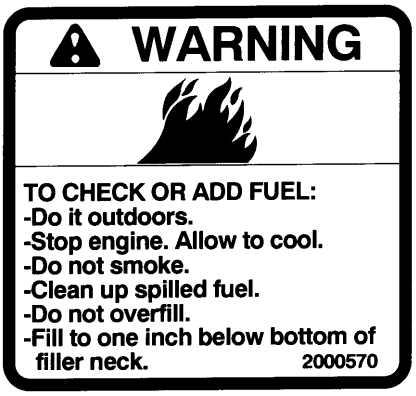

FUEL SHUT OFF (A) - Move to the “OFF” position to shut off the fuel whenever transporting the machine by trailer, truck or during storage. Move to the “ON” position before starting the engine.

SWITCH (B) -
Move to the “OFF” position to stop the engine. Move to the “ON” position before starting engine.
The Kohler engine switch is built into the Fuel Shut Off (A).

CHOKE (C) -
Move to the “CHOKE” position to apply the choke. Move to the “RUN” position to remove the choke.

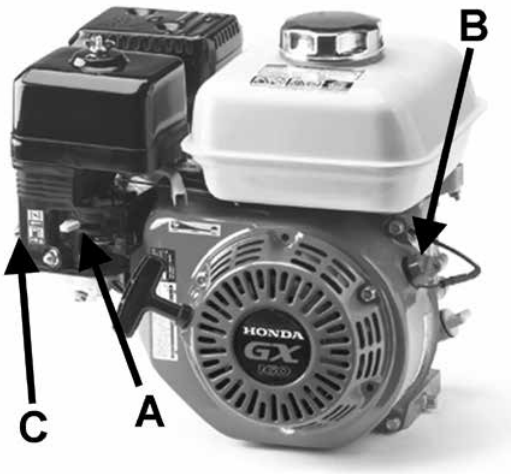

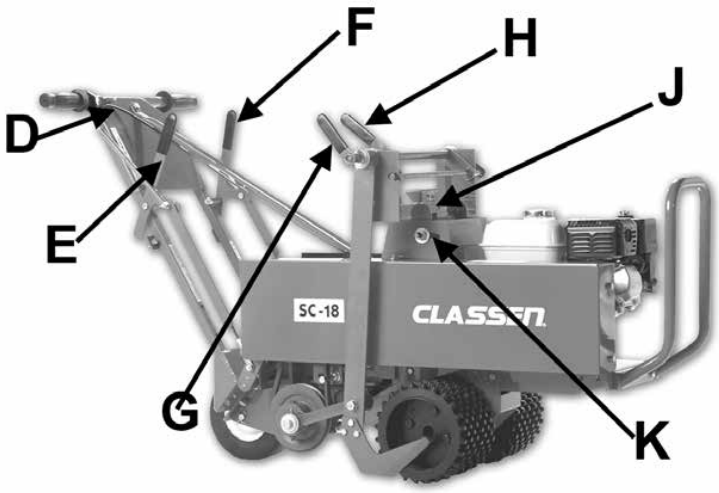

THROTTLE (D) - Squeeze the throttle control to increase the engine rpm. Squeezing the throttle control to increase the engine rpm also engages the centrifugal clutch powering the blades and wheels when the blades and/or wheel drives are engaged.

CUTTER BLADE HANDLE (E) -
Move the Cutter Blade handle forward to engage the blade drive.
Move the Cutter Blade handle back to disengage the blade drive.

HEIGHT ADJUSTMENT NUT (G) -
Loose the Height adjustment nut to allow raising or lowering the cutter blade.

WHEEL DRIVE HANDLE (F) -
Move the Wheel Drive Handle forward to engage the blade drive.
Move the Wheel Drive Handle back to disengage the blade drive.

HEIGHT ADJUSTMENT BAR (H) -
Use the Height Adjustment Bar to raise or lower the cutter blade and to get the desired sod cutting depth.

DEPTH GAUGE(J) -
Use the Depth Gauge to set the desired sod cutting depth. This acts as a positive stop for the Height Adjustment Bar **H.**

BLADE ANGLE-PITCH (K)

Under normal operating conditions, the blade angle is slight (blade bottom is flat). In extremely hard soil or when cutting with a dull blade, the blade may want to ride out of the ground. At this time, it may help to angle the blade down. A short trial run will indicate what blade angle is best. To do this, you will loosen the pitch adjustment bolt **K** and move it slightly toward the engine, then retighten bolt and nut.

PRE-OPERATION CHECK LIST (Operator's responsibility)

- Review and follow all safety rules and safety decal instructions.
- Check that all safety decals are installed and in good condition. Replace if damaged.
- Check to make sure all shields and guards are properly installed and in good condition.
- Check that all hardware is properly installed and secured.
- Check to be sure engine is free of dirt and debris. Pay particular attention to the cooling fins, governor parts and muffler. Clean air intake screen. Check air cleaner; service is necessary.
- Inspect area. Remove stones or other hard objects that might cause damage.
- Check that there are no underground utilities in work area.
- Check all lubrication points and grease as instructed in manual.
- Perform a functional check of the safety interlock system each time you operate the unit. If it doesn't work, repair before using the machine.

⚠ WARNING

ALL GUARDS MUST BE IN PLACE WHILE MACHINE IS IN OPERATION.

⚠ WARNING

KEEP HANDS AND FEET AWAY FROM MOVING PARTS.

READ SAFETY SIGNS

Carefully read and follow caution stickers.

BEFORE STARTING THE ENGINE

1. Be familiar with the controls, how each functions, and what each operates.
2. Check engine oil level. Add oil if necessary, following the engine manufacturer's recommendations. Refer to engine manual supplied with machine.
3. Open the fuel valve.
4. Fill the fuel tank with the amount and type of fuel recommended by the engine manufacturer.
5. CHOKE: For cold starts, set the throttle lever to the half-open position and move the choke to the ON position. For warm starts set the throttle to the half-open position and the choke to the OFF position.

FUEL

Petrol (gasoline) is extremely flammable and highly explosive under certain conditions. BE SURE to install fuel cap after refueling.

Fill fuel tank with good quality, clean, unleaded regular gasoline to the level recommended by the engine manufacturer.

To Check or Add Fuel:

- Use a funnel to avoid spilling.
- Do it outdoors.
- Do not smoke.
- Stop the engine; allow to cool.
- Do not overfill.
- Clean up spilled fuel.

SAFETY

Operate Safely

Carefully read this manual and operate sod cutter correctly.

Protect Children

Keep children and pets out of the area where you are cutting sod.

Avoid Tipping

Make sure you do not get too close to sharp drop-offs to avoid tipping sod cutter over.

Operate Safely On Slopes

You may cut sod any direction on slopes, however, make sure you do this carefully. Cutting on slopes can be dangerous. To avoid any accidents, make sure to leave yourself room to correct the problem if one arises. Always park your sod cutter on level ground.

Practice Safe Maintenance

Keep all machine parts in good condition and fastened in place. Fix damages immediately. Replace worn or broken parts. Whenever you work on the sod cutter, disconnect spark plug wire.

Start Engine Safely

Make sure hands and feet are out of the way of moving parts when starting engine.

ENGINE STARTING PROCEDURES

NOTICE: There are two locations on this engine that require oil, both the crankcase and the gearbox. Running the engine or gearbox with a low oil level can cause engine damage. Refer to the engine manual for complete engine information and recommendations.

Engine Oil Level Check

1. BEFORE CHECKING ENGINE:
   - make certain the engine is level
   - the engine switch is in the OFF position
   - the sod cutter blade is NOT engaged
   - the drive wheels are disengaged.
2. Remove the filler cap/dipstick and wipe it clean.
3. Insert and remove the dipstick without screwing it into the filler neck. Check the oil level shown on the dipstick.
4. If the oil level is low, fill to the edge of the oil filler hole with the recommended oil. SAE 10W-30 is recommended for general use. Refer to engine oil recommendations in engine manual for other viscosities and information.
5. Screw in the filler cap/dipstick securely.

Engine Gearbox Oil Level Check

1. Check the engine gearbox oil level with the engine stopped and in a level position.
2. Remove the filler cap/dipstick and wipe it clean.
3. Insert and remove the dipstick without screwing it into the filler hole. Check the oil level shown on the dipstick.
4. If the oil level is low, add oil to reach the upper limit mark on the dipstick. See engine manuals for more information.
5. Screw in the filler cap/dipstick securely.

Starting Engine

1. Turn fuel cock to the “open” position.
2. Turn choke on (closed).
3. Turn ignition switch to “on”.
4. Pull recoil starter rope until engine starts.
5. After engine is warm, turn off choke (open).
6. Allow engine to run one minute before cutting sod.
7. Check engine rpm setting before operating. DO NOT exceed 3600 rpm.

Stopping Engine

1. Release finger throttle control.
2. Turn off ignition switch.

OPERATING THE SOD CUTTER

Preparation

1. Evaluate the lawn area and identify obstacles and debris (i.e. hoses, toys, etc.). Remove all items.
2. Make sure underground sprinkler heads and other hidden obstacles are marked to prevent damage.
3. Mark other areas where sod cutting will be a problem or too risky (i.e. mud, tree roots, steep hills).

Operating

Refer to Controls Page Illustration

1. Start the engine. CAUTION: To avoid injury, do not place your feet or other body parts under the blade while starting the engine.
2. Select the correct cutting depth desired up to 2 1/2 inches. Loosen the knob **J** from the depth gauge plate, located under the Height Adjustment Bar, located under height adjustment bar, and put it to the correct height setting. Tighten the knob.
3. Push the Wheel Drive Handle **F** and the Cutter Blade Handle **E** to the “ON” position toward the engine.
4. Raise the main handle upward so the front nose of the sod cutter rests on the ground.
5. Loosen the Height Adjustment Nut **G** and lower the Height Adjustment Bar **H** to rest on the depth gauge. Tighten the Height Adjustment Nut **G** securely so it will not loosen with the vibration of the machine.
6. From the operator’s position lower the handle until the cutting blade rests on the ground. You are now ready to cut sod.
7. Pull the throttle **D** to the desired operating speed by pulling the finger throttle control toward you. Maximum engine rpm is recommended for smooth operation.
8. After cutting a short distance, stop machine by letting the finger throttle control go back to its original position. Check thickness of cut and adjust if necessary.
9. At the end of each cutting pass, lift up on the handle bar to clear the cutting blade from the sod. Retard the throttle control and turn machine around into the position for the next cut.
10. When finished cutting sod, reverse steps 6 through 3, leaving the wheel drive handle in the “ON” position for transportation.

WARNING

When replacement parts are required, use genuine Schiller Grounds Care, Inc. parts or parts with equivalent characteristics, including type, strength and material. Failure to do so may result in product malfunction and possible injury to the operator and/or bystanders.

Carbon monoxide present in the exhaust is an odorless and deadly gas. Never start or run the engine inside where exhaust fumes can collect.

Provide enough fresh air to keep fumes from getting too strong. Replace any warning decal that becomes illegible immediately.

WARNING

BLADE SHARPENING – Wear the appropriate personal protective equipment when sharpening blades. Use correct tools for sharpening or when servicing machine.

GENERAL MAINTENANCE

To keep the sod cutter in good operating condition, perform the following:

- Keep blade sharp; a sharp blade cuts cleaner, faster and more uniformly and places less load on the machine. Sharpen cutting edge on bevel or top side only.
- Keep drive belt at proper tension and free of oil and dirt at all times.
- Check engine oil level and air filter element daily.
- Check for loose bolts and connections.
- All grease fittings are pressurized type. Use a good grade Lithium Base Grease or equivalent. Grease eccentric arms sparingly every 4 hours of service, all others daily. Wipe off all grease fittings before and after each greasing (there are a total of 8 grease fittings).
- To make sure the chain on the front drive wheels is tight, you will need to remove the chain guard to check this. If tightening is required, loosen nuts and bolts on the 3/4” pillow block bearings and push the bearings toward the back of the sod cutter until chain is tight. Make sure both bearings go back evenly to keep jackshaft running even with the frame. After doing this, retighten nuts and bolts on the bearing and replace the chain guard.
- Engine (refer to Honda owner’s manual).

Storage Instructions

⚠WARNING

To prevent possible explosion or ignition of vaporized fuel, do not store equipment with fuel in tank or carburetor in enclosure with open flame (for example, a furnace or water heater pilot light).

Daily Storage

1. Check engine oil level and air filter element daily.
2. Check oil level in engine gearbox.
3. Close fuel valve at bottom of fuel tank.
4. Clean cutting blade (grass, dirt, etc.).

Extended Storage

Before the equipment is put into storage for any period exceeding 30 days:

1. Follow the storage instructions included in the engine manufacturer's owner manual
2. Lubricate all lubrication fittings.
3. Clean and oil cutting blade to prevent rust.

To put equipment into operation after an extended storage:

1. Check for loose parts and tighten if necessary.
2. Check for cracked or broken blades and replace.
3. Fill fuel tank.
4. Check oil levels with engine on a flat surface. (refer to engine manufacturer's owner manual).
5. Start the engine.
6. Check for fuel leaks.
7. Check operation of control handles(s).

PROBLEM	CAUSE	REMEDY
Blade will not stay in ground	a. Bottom of blade is rounded off	a. Blade should be sharpened or replaced
Belts jump off	a. Wrong type of belt b. Pulley misalignment	a. Use only the special factory belt b. Realign pulley

NOTES:

SC-18A/5.5 & SC-18A/8.0

ENGINE

Model SC18AHD ..... 4 cycle 5.5 HP
Honda Model GX160 9.9 cu-in (163 cc)

Model SC18AHD ..... 4 cycle 5.5 HP
Kohler Model CH255 10.8 cu-in (17 cc)

Starter..... Recoil
Governor.....3400 RPM ± 200 RPM, no load
Clutch.....spring loaded belt tightener type

REDUCTION

Engine to blade 3.03 to1
Engine to drive wheels ..... 57.2 to 1

WHEELS:

Drive .....8” (203 mm) Dia. w/knobby tread vulcanized to hub
Rear ..... 8 x 1.75 (203 X 45mm) semi-pneumatic tires

CUTTING WIDTH:

SC-18 .....18”

REDUCTION BOX

Lubrication.....20W50
Capacity ..... 31/2Pints(1.7L)

CUTTING DEPTH .....up to 2-1/2”

BLADE PITCH

Hand lever adjustment .....variable 0° to 9°

BLADE SPEED .....1188 RPM @ 3400 engine RPM

DIMENSIONS

Width ..... 23” - For all, except SC-24 - 25”
Length .....59”
Height .....35”
Wheel Base .....22”

WEIGHT

Dry Weights

SC-18AHD.....328 lbs.
SC-18AHD/5.5K .....328 lbs.

PARTS SECTION

FIGURE 1

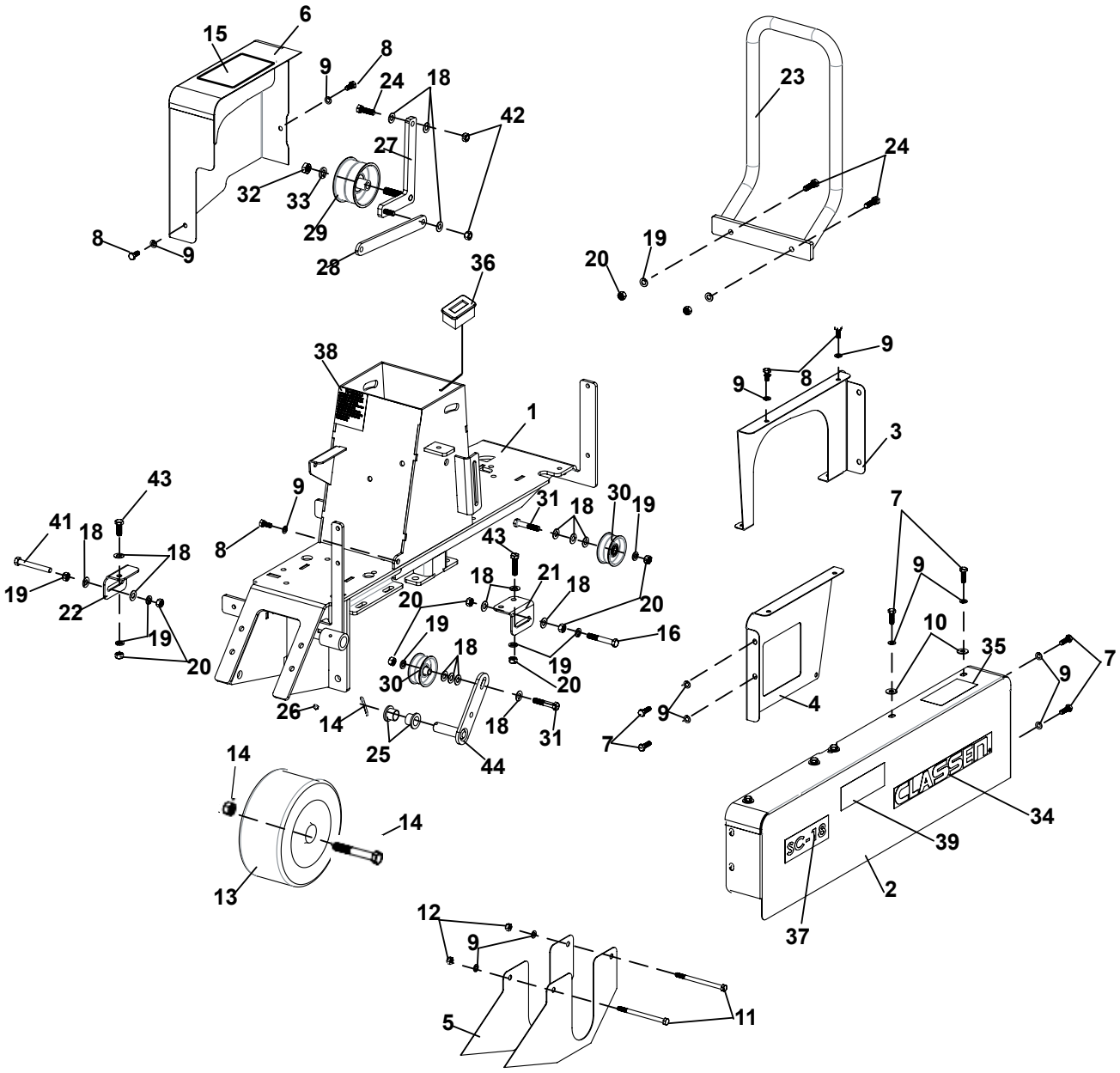
6
15
8
9
24
18
42
27
32
33
29
28
8
9
23
24
19
20
36
38
1
9
8
9
3
43
9
41
18
18
8
31
18
30
19
43
19
22
19
20
18
21
18
20
20
16
19
18
19
20
30
20
26
14
25
18
31
44
7
9
10
35
7
9
4
9
7
14
14
13
CLASSEN
SC-18
34
39
2
37
12
9
5
11

SC-18A

MAIN FRAME ASSEMBLY

FIGURE 1

ITEM	PART NO.	DESCRIPTION	QTY
1	4172187	S-FRAME, SOD CUTTER	1
2	4171985	S-LARGE GUARD	1
3	C400267.17	INNER ENGINE GUARD, 5.5 HP	1
4	C400388.17	TRANSMISION COVER, GEAR	1
5	4173101.17	CHAIN GUARD	1
6	4173102.17	SMALL GUARD	1
7	C500133	BOLT, 5/16-18 x 1	9
8	C500140	BOLT, 5/16-18 x 3/4	5
9	C500115	WASHER, 5/16 LOCK	16
10	C500083	WASHER, 5/16 FLAT	9
11	C500219	BOLT, 5-16-18 x 5	2
12	C500101	NUT, 5/16-18	2
13	C100017	TIRE & WHEEL ASSEMBLY	1
14	920-0034	S-REAR WHEELBOLT AND NUT	1
15	C100559	DECAL-LUBRICATE	1
16	C500154	BOLT, 3/8-16 x 2-1/2	1
17	C500146	BOLT, 3/8-16 x 1-1/2	1
18	C500042	WASHER, 3/8” FLAT	15
19	C500130	WASHER, 3/8 LOCK	8
20	C500129	NUT, 3/8-16	10
21	C300004.7	CLIP, R.H. BELT ADJUSTMENT	1
22	C300134.7	CLIP, BELT L.H.	1
23	C400236.17	BUMPER, 5.5 HP	1
24	C500134	BOLT, 3/8-16 x 1-1/4	5
25	C100021	BUSHING, BRASS	2
26	C500001	GREASE FITTING, 1/4 x 28	8
27	C400114.7	ARM W/ 1/2’ BOLT, DUAL DRIVE	1
28	C300069.7	ARM, DRIVE LINKAGE	1
29	C100208	PULLEY, DUAL DRIVE IDLER	1
30	C100010	PULLEY, IDLER	2
31	C500091	BOLT, 3/8-16 x 2	2
32	C500106	NUT, 1/2-13	1
33	C500006	WASHER, 1/2 LOCK	1
34	4170316	DECAL, CLASSEN	2
35	2000577	DECAL, DANGER	1
36	4171863	METER-HOUR	1
37	C100131	DECAL , “SC-18”	2
38	C100504	SPARK ARRESTOR DECAL	1
39	4175448	DECAL-HOME DEPOT	2
40*	4168760	DECAL-WARNING HAND PINCH	1
41	C500159	BOLT, 3/8-16 X3	1
42	C500041	NUT, 3/8-16 LOCK	2
43	C500043	BOLT, 3/8-16 X 1	2
44	C400010.7	ARM, BLADE CLUTCH	1

ITEM	PART NO.	DESCRIPTION	QTY

*** NOT ILLUSTRATED**

FIGURE 2

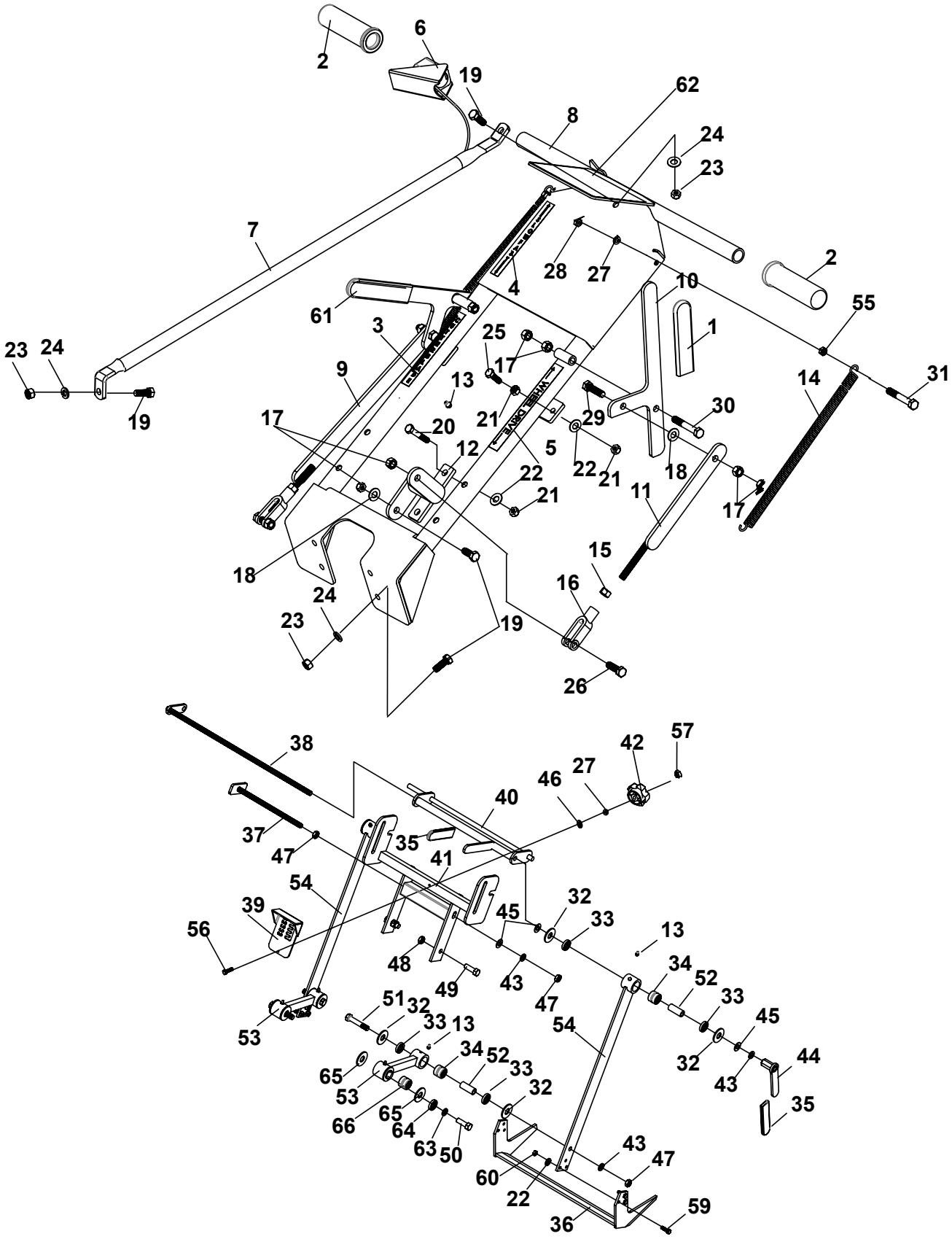
2
6
19
62
8
24
23
7
28
27
2
4
10
55
61
3
25
1
23
24
17
9
13
14
31
19
21
29
30
17
20
12
5
22
22
21
18
21
11
17
18
15
16
24
23
19
26
38
42
57
27
46
40
37
35
47
41
54
32
39
45
33
56
13
48
34
52
49
43
47
33
51
32
45
33
13
54
53
34
52
32
44
65
33
43
53
32
35
66
65
64
63
50
43
47
60
22
59
36

HANDLE ASSEMBLY

FIGURE 2

ITEM	PART NO.	DESCRIPTION	QTY
1	4176911-02	GRIP-1x.125x4 YELLOW	1
2	C100018	GRIP, L.H. HANDLE	2
3	C100132	DECAL, CUTTER BLADE	1
4	C100133	DECAL, SLOW / FAST	1
5	C100134	DECAL, WHEEL DRIVE	1
6	C100486	THROTTLE CONTROL & CABLE	1
7	C300138.17	BRACE, HANDLE	1
8	4172184	S-HANDLE, MAIN INCLUDES ITEMS 3-5 & 62	1
9	C400007.17	ARM, CUTTING BLADE ADJ	1
10	C400008.17	HANDLE, ENGAGEMENT	2
11	C400074.17	ARM, WHEEL DRIVE ADJ	1
12	C400110.17	PIVOT ASSEMBLY	1
13	C500001	GREASE FITTING, 1/4 x 28	1
14	C500019	SPRING, SMALL HANDLE	2
15	C500025	NUT, 3/8-24	2
16	C500026	YOKE, 3/8 CLEVIS	2
17	C500041	NUT, 3/8-16 LOCK	11
18	C500042	WASHER, 3/8” FLAT	3
19	C500043	BOLT, 3/8-16 X 1	7
20	C500074	BOLT, 5/16-18 X 1-3/4	2
21	C500101	NUT, 5/16-18	6
22	C500115	WASHER, 5/16 LOCK	10
23	C500129	NUT, 3/8-16	6
24	C500130	WASHER, 3/8 LOCK	6
25	C500133	BOLT, 5/16-18 x 1	2
26	C500134	BOLT, 3/8-16 x 1-1/4	2
27	C500137	WASHER, 1/4 LOCK	3
28	C500139	NUT, 1/4-20 LOCK	4
29	C500146	BOLT, 3/8-16 x 1-1/2	2
30	C500154	BOLT, 3/8-16 x 2-1/2	2
31	64123-310	BLT-HEX 1/4-20X2 PLT FLTHR+	2
32	C100001	WASHER, 3/4 NYLON	8
33	C100002	SEAL	8
34	C100003	BEARING	4
35	C100007	GRIP, RUBBER	2
36	C100016.7	BLADE, 18” SOD CUTTER	1
37	C200004.7	BOLT PITCH ADJUSTMENT	1
38	C200005.7	BOLT, HEIGHT ADJUSTMENT	1
39	C300039.7	PLATE, DEPTH GAUGE	1
40	C400001.7	BAR, HIEGHT ADJUSTMENT	1
41	C400238.7	PITCH ADJUSTMENT BAR	1
42	4172692	KNOB-PLASTIC	1
43	C500006	WASHER, 1/2 LOCK	4
44	C500007.7	NUT, 1/2 HANDLE	1
45	C500034	WASHER, 1/2 FLAT	10
46	C500088	WASHER, 1/4” FLAT	1
47	C500106	NUT, 1/2-13	4
48	C500131	NUT, 1/2-13 LOCK	2
49	C500241	Bolt, 1/2-13 x 1	2
50	C500249	BOLT, 1/2 X1 FINE THREAD	2
51	C500152	BOlt, 1/2-13 X 2-3/4	2
52	C600001	STEEL SLEEVE	4
53	4179027	S- ARM, ECCENTRIC-incl. items 13,32,33,34,52,65,66	2
54	4172017	S-ARM, BLADE	2
55	C500136	NUT, 1/4-20	4
56	C500296	BOLT, 1/4-20 CRG	1
57	C500068	NUT, 1/4-20 NYLOC	1
58*	4164033	LABEL-CHF VERT	2
59	4175303	BLT-HEX 5/16-24X1 FL THD	6
60	64025-51	NUT-5/16-24	6
61	4176911-01	GRIP-1x.125x4 GREEN	1
62	4176440	LABEL, SC-18	1
63	C500272	WASHER-1/2” EXT LOCK	2
64	C400412.7	WSHR-STEEL ENHANCED	2
65	C100626	WSHR-PLASTIC	4
66	C100625	BEARING-ENHANCED	2

*NOT ILLUSTRATED

FIGURE 3

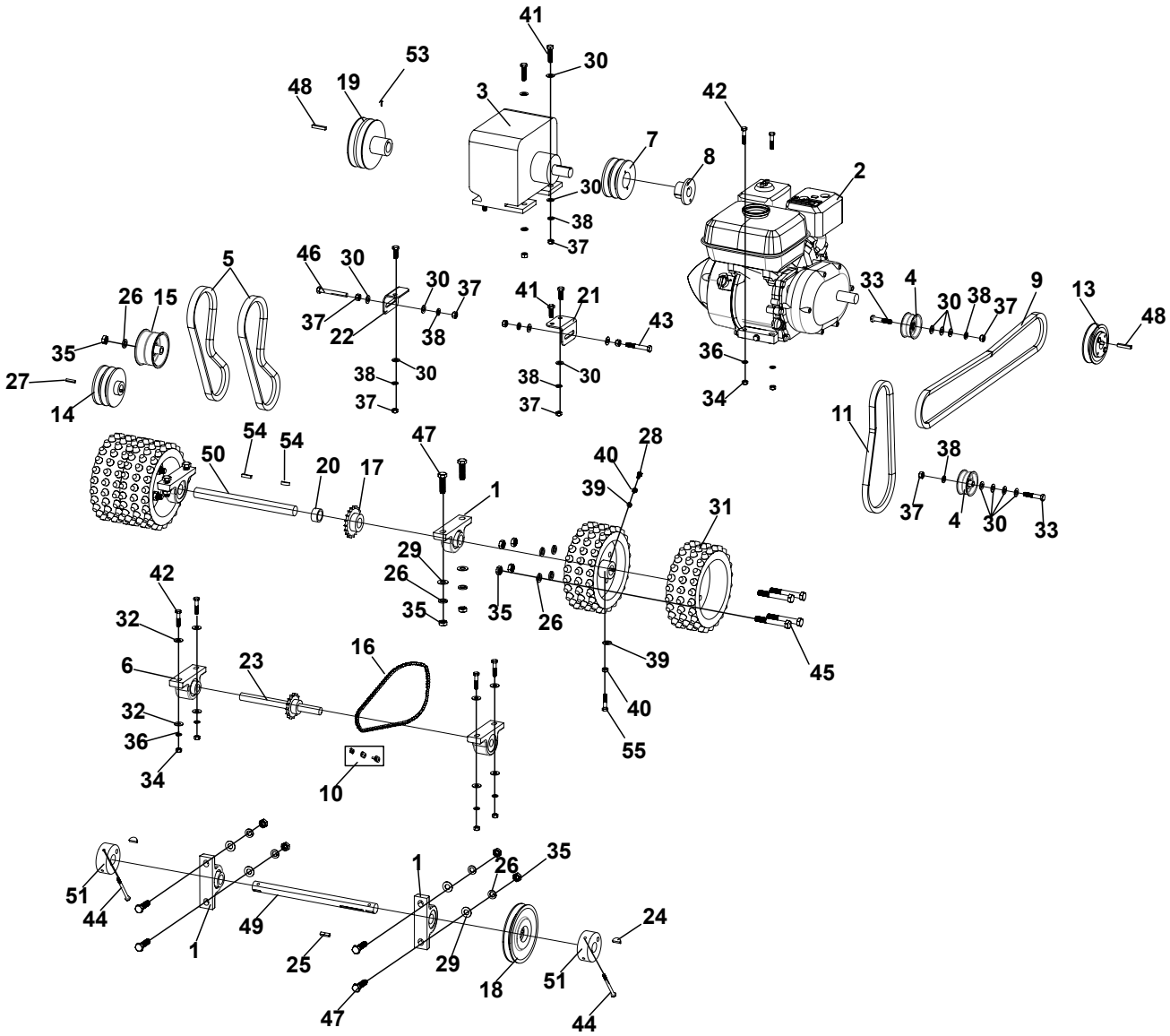
41
30
53
48
19
3
42
7
8
2
30
38
37
5
46
30
30
37
41
21
33
4
30
38
37
9
13
48
26
15
37
22
38
43
35
36
27
38
30
38
30
34
14
37
37
11
54
54
47
28
38
50
20
17
40
1
39
37
4
30
33
31
29
26
35
35
26
42
32
6
23
16
39
45
32
40
36
55
34
10
1
26
35
51
44
49
24
1
25
29
18
51
47
44

POWER TRAIN ASSEMBLY

FIGURE 3

ITEM	PART NO.	DESCRIPTION	QTY
1	C100004	BEARING 1” PILLOW BLOCK	4
2	C100005	ENGINE, 5.5 H.P. HONDA	1
	102-0003-00	ENGINE, 5.5 H.P. KOHLER	
3	C100008	REDUCTION BOX	1
4	C100010	PULLEY, IDLER	2
5	C100011	V-BELT, BX31 DRIVE	2
6	C100013	BEARING 3/4” PILLOW BLOCK	2
7	C100022	PULLEY, TAPER LOCK	1
8	C100023	HUB, TAPER LOCK	1
9	C100024	V-BELT, B B56 ENGINE 5.5HP	1
10	C100025	LINK, #40 CONNECTING	1
11	C100026	V-BELT 6934 BELT	1
12	C100027	SPRING, THROTTLE	1
13	C100028	PULLEY W/ HUB & BOLTS	1
14	C100207	SHEAVE, DUAL DRIVE DBLE V	1
15	C100208	PULLEY, DRIVE DBLE IDLER	1
16	C100307	CHAIN, 58 ROLLERS	1
17	C200001	SPROCKET W/HUB, SHAFT	1
18	C200002	PULLEY W/HUB & BOLTS, 6”	1
19	C200031	PULLEY, DUAL DRIVE 5” SPLIT 1	
20	C300001	SPACER, DRIVE SHAFT	1
21	C300004.7	CLIP, R.H. BELT ADJUSTMENT	1
22	C300134.7	CLIP, BELT L.H.	1
23	C200039	JACK SHAFT	1
24	C500003	KEY, 1/4 x 7/8 HALF MOON	2
25	C500004	KEY, 1/4 x 1 SQUARE	2
26	C500006	WASHER, 1/2 LOCK	17
27	C500240	KEY, 3/16 X 1 1/2	1
28	C500029	BOLT, 1/4-20 x 3/4	2
29	64163-67	WSHR-.516X1X12GA	8
30	C500042	WASHER, 3/8” FLAT	18
31	4175021	WHEEL, MOLDED	4
32	C500083	WASHER, 5/16 FLAT	8
33	C500091	BOLT, 3/8-16 x 2	2
34	C500101	NUT, 5/16-18	8
35	C500106	NUT, 1/2-13	17
36	C500115	WASHER, 5/16 LOCK	8
37	C500129	NUT, 3/8-16	11
38	C500130	WASHER, 3/8 LOCK	17
39	C500137	WASHER, 1/4 LOCK	4
40	C500136	NUT, 1/4-20	4
41	C500146	BOLT, 3/8-16 x 1-1/2	5
42	C500147	BOLT, 5/16-18 x 1-1/2	8
43	C500154	BOLT, 3/8-16 x 2-1/2	1
44	64189-15	BLT-HEX 1/4-20 X 1	2
45	C500158	BOLT, 1/2-13 x 3-1/2	8
46	C500159	BOLT, 3/8-16 X3	1
47	C500174	BOLT, 1/2-13 x 1-3/4	8
48	C500181	KEY, 1/4 x 1-1/2 SQUARE	2
49	C600003	SHAFT, ECCENTRIC	1
50	4171051	SHAFT, 12” DRIVE	1
51	4179029	S-ECCENTRIC HUB SET (INCL. (2) HUBS AND (2) ITEM 24)	1
52*	C100244	SWIVEL, WIRE	1
53	C500064	SET SCREW, 5/16-18 X 3/8	1
54	64164-51	KEY-SQ 1/4 X 1-1/4 ROUNDED	2

*NOT ILLUSTRATED

Classen Warranty Statement

2-Year Limited Warranty

This Classen Product is warranted against defects in materials and workmanship for a period of two (2) years from the date of purchase from an authorized dealer under the following terms and conditions. Schiller Grounds Care's responsibility under this limited warranty is restricted to repairing or replacing, at its option, any covered part found to be defective in material or workmanship during the warranty period. All parts replaced under warranty will be considered as part of the original product and any warranty on the replaced parts will expire coincidentally with the original product warranty.

SCHILLER GROUNDS CARE, INC. MAKES NO EXPRESS OR IMPLIED WARRANTIES, REPRESENTATIONS, OR PROMISES EXCEPT THOSE CONTAINED HEREIN. THERE ARE NO OTHER WARRANTIES, INCLUDING WARRANTIES OF MERCHANTABILITY AND FITNESS FOR A PARTICULAR PURPOSE. ALL WARRANTIES OTHER THAN THE EXPRESS WARRANTY SET FORTH ABOVE ARE SPECIFICALLY DISCLAIMED. THE DURATION OF ANY IMPLIED WARRANTY, INCLUDING MERCHANTABILITY AND FITNESS FOR A PARTICULAR PURPOSE, IS LIMITED TO THE DURATION OF THIS WRITTEN LIMITED WARRANTY.

To Obtain Warranty Service - Warranty service must be performed by an authorized Classen dealer. To locate a dealer, please visit: www.classenturfcare.com and click on FIND A DEALER. For further assistance, write or email the Technical Services Department of Schiller Grounds Care

Schiller Grounds Care, Inc.
1028 Street Road
Southampton, PA 18966
techservicesupport@schillergc.com

ABOUT YOUR WARRANTY

The warranty period begins on the date of purchase by the original retail or commercial customer from an authorized Classen dealer and is not transferable. Warranty service must be performed by an authorized Classen dealer. If a warranty replacement becomes necessary, the authorized dealer must be prepared to provide the physical component for verification (freight prepaid) upon request from Schiller Grounds Care. Warranty service will be performed without charge to the original purchaser for parts and labor. The original purchaser is responsible for the expense of delivering the equipment, part, or accessory to and from an authorized dealer's service center. The purchaser is responsible for any premium charged for overtime labor requested by the purchaser and for any service and/or maintenance not directly related to any defect covered under this limited warranty. Proof of purchase will be required to substantiate any warranty claim. Without proof of the initial purchase date from an authorized dealer, the manufacturing date of the product will be used to establish the warranty period.

EXCLUSIONS

This warranty only covers defects in materials or workmanship.

Engines and Other Manufacturers - Schiller Grounds Care makes no warranty with respect to engines or engine parts such as spark plugs, lubricants, starters, and carburetors. The engine warranty is covered by the engine manufacturer. Consult the Operator's Manual for the engine provided with your product or ask an authorized dealer for the terms and conditions of these warranties. Schiller Grounds Care makes no warranty with respect to other parts not of its manufacture such as tires, batteries, gearboxes, or similar. These other parts may be covered by the warranties of their respective manufacturers.

Wear Items - This limited warranty does not cover damages or defects from normal wear and tear. This limited warranty does not include routine maintenance and normal maintenance parts, including but not limited to tires, batteries, transmissions, clutches, filters, gearboxes, blades, tines, belts, chains, cables, or bearings.

Negligence and Improper Maintenance or Repair - This limited warranty does not cover any equipment that has been subject to lack of reasonable and proper maintenance, misuse, lack of proper storage, or accidents. This limited warranty does not cover any damage to the equipment that is caused by a freight carrier or is the result of failure to follow the operating instructions within the Owner's Manual. This limited warranty does not cover any defects due to repairs, modifications, or alternations made to the product by anyone other than Schiller Grounds Care or its authorized dealers. In addition, this limited warranty does not cover repairs made necessary due to a lack of proper protection during storage. This limited warranty does not cover damage caused by the use of parts, supplies, or accessories, including, without limitation, filters, spark plugs, carburetors, ignition, drive belts, brakes, gasoline, fuel, oil, or lubricants, which in the reasonable judgment of Schiller Grounds Care, are either incompatible with the product, adversely affect its operation, performance, durability or are other than as recommended in the Operator's Manual or other operational instructions provided by Schiller Grounds Care.

Classen Warranty Statement

Improper Use - This limited warranty does not cover any Classen Product, part, or accessory that (i) has been subject to misuse, abuse, neglect, negligence, or accident, or that has not been assembled, operated, or maintained in accordance with the operating or maintenance instructions specified in the Operator's Manual; or (ii) has been altered or modified so as to adversely affect its operation, performance or durability, or that has been altered or modified in ways not approved by Schiller Grounds Care. To the extent permitted by law, neither Schiller Grounds Care nor any company affiliated with it makes any warranties, representations, or promises as to the quality, performance, or freedom from defect of the Classen Product, part, or accessory covered by this limited warranty. The authorized dealer makes no warranty of its own and such dealer has no authority to make any representation, warranty, or promise on behalf of Schiller Ground Care or to modify the terms or limitations of this limited warranty in any way.

Other Exclusions - This limited warranty does not include reconditioned, refurbished, used, or demonstration equipment. This limited warranty excludes failures due to acts of nature beyond the manufacturer's control.

Extended Warranty - Schiller Grounds Care disclaims responsibility for any separately purchased extended warranty. ALL WARRANTIES OTHER THAN THE EXPRESS WARRANTY SET FORTH ABOVE ARE SPECIFICALLY DISCLAIMED. THE DURATION OF ANY IMPLIED WARRANTY, INCLUDING MERCHANTABILITY AND FITNESS FOR A PARTICULAR PURPOSE, IS LIMITED TO THE DURATION OF THIS WRITTEN LIMITED WARRANTY.

Disclaimer of Consequential Damage - Schiller Grounds Care disclaims any responsibility for incidental or consequential damages including, but not limited to, the expense for gasoline, the expense of delivering the product to an authorized service dealer, the expense of returning the product to the purchaser, mechanic's travel time, telephone charges, rental of a like product during the repair timeframe, travel, loss of revenue, loss of time, or inconvenience. SCHILLER GROUNDS CARE, INC. DISCLAIMS ALL LIABILITY FOR INDIRECT, INCIDENTAL, AND/OR CONSEQUENTIAL DAMAGES IN CONNECTION WITH THE USE OF THE CLASSEN PRODUCTS COVERED BY THIS LIMITED WARRANTY. SOME STATES DO NOT ALLOW LIMITATIONS ON HOW LONG AN IMPLIED WARRANTY LASTS AND/OR DO NOT ALLOW THE EXCLUSION OR LIMITATION OF INCIDENTAL OR CONSEQUENTIAL DAMAGES, SO THE ABOVE LIMITATIONS AND EXCLUSIONS MAY NOT APPLY TO YOU. THIS WARRANTY GIVES YOU SPECIFIC LEGAL RIGHTS, AND YOU MAY ALSO HAVE OTHER RIGHTS WHICH VARY FROM STATE TO STATE.