COMPACT AERATOR

TA22H

PARTS, OPERATOR'S & SAFETY MANUAL

MAN 802-0016
Rev. B 10-2024

SCHILLER GROUNDS CARE

CALIFORNIA PROPOSITION 65

WARNING: Cancer and Reproductive Harm - www.P65Warnings.ca.gov.

ADVERTENCIA: Cáncer y Dãno Reproductivo - www.65Warnings.ca.gov.

WARNING

The engine exhaust from this product contains chemicals known to the State of California to cause cancer, birth defects or other reproductive harm.

ADVERTENCIA

El estado de California hace saber que los gases de escape de este producto contienen productos quÍ mi-cos que producen cá ncer, defectos de nacimiento y otros dañ os en el proceso de reproducció n humana.

IMPORTANT MESSAGE

This Operation / Part Manual provides the information necessary for safe and efficient operation and service. For your safety, it is important that you read and understand this entire manual before operating your equipment.

This Operator's Manual is part of the machine. Suppliers of both new and second-hand machines must make sure that this manual is provided with the machine. Learn the proper operation of all controls. Observe all safety precautions. Follow all instructions and warnings completely. Do not remove or defeat any safety features.

Schiller Grounds Care, Inc.
1028 Street Road
Southampton, PA 18966
PHONE 877-596-6337 • FAX 215-357-8045

TABLE OF CONTENTS **FIGURES** **PAGE**

SAFETY....4-7
LABELS....8
CONTROLS....9
OPERATION....10-11
MAINTENANCE / STORAGE....12-13
PARTS....15
MAIN ASSEMBLY....16-17
HANDLE AND CONTROL ASSEMBLY....18-19
TINE ASSEMBLY....20-21
WARRANTY....BACK COVER

DETAILS

MEASUREMENTS

U.S. Units of measure are used in this manual.

SERIAL NUMBERS

Write frame and engine serial numbers, plus model num-bers in “Owner’s Record” section below. You may need these numbers when you order parts.

ORDERING PARTS

When ordering parts, always give the serial number and model of your Aerator as well as the quantity, part number and description of the part needed.

DIRECTIONS

“Right Hand” and “Left Hand” sides of the Aerator are determined by facing the “back” of the Aerator as you would operate the machine.

OWNER’S RECORD

DATE PURCHASED _____
AERATOR MODEL NUMBER _____
AERATOR SERIAL NUMBER _____
ENGINE MODEL NUMBER _____
ENGINE SERIAL NUMBER _____

NOTICE !!!

Unauthorized modifications create extreme safety hazards for operators and bystanders along with potential product damage.

Schiller Grounds Care, Inc. strongly warns against, rejects and disclaims any modifications, accessories or product alterations that are not designed, developed, tested and approved by the Schiller Grounds Care, Inc. Engineering Department. Any Schiller Grounds Care, Inc. warranty is voided if a product is altered, modified or changed in any manner without approval from Schiller Grounds Care, Inc.

Any and all liability for personal injury and/or property damage caused by unauthorized modifications, accessories or product alterations are considered the responsibility of the individual(s) or company designing and/or making such changes. Schiller Grounds Care, Inc. will vigorously pursue full indemnification and costs from any party responsible for such unauthorized post-manufacture modifications and/or accessories should personal injury and/or property damage result.

This symbol means:

ATTENTION!
BECOME ALERT!

Your safety and the safety of others is involved.

Signal word definitions:

The signal words below are used to identify levels of hazard seriousness. These words appear in this manual and on the safety labels attached to Classen machines. For your safety and the safety of others, read and follow the information given with these signal words and/or the symbol shown above.

⚠DANGER

DANGER indicates an imminently hazardous situation which, if not avoided, **WILL** result in death or serious injury.

⚠WARNING

WARNING indicates a potentially hazardous situation which, if not avoided, **COULD** result in death or serious injury.

⚠CAUTION

CAUTION indicates a potentially hazardous situation which, if not avoided, **MAY** result in minor or moderate injury. It may also be used to alert against unsafe practices or property damage.

CAUTION

CAUTION used without the safety alert symbol indicates a potentially hazardous situation which, if not avoided, **MAY** result in property damage

SCHILLER GROUNDS CARE, INC.
1028 Street Rd.
Southampton, PA 18966

Model:

S/N:

SCHILLER
GROUNDS CARE

DATE:

MODEL NUMBER: This number appears on sales literature, technical manuals and price lists.

SERIAL NUMBER: This number appears only on your machine. Use this number when ordering parts or seeking warranty information.

Operator Preparation and Training

- Read the operation manual.
- Read the engine manufacturer's owner manual.
- Explain this material to any operator or mechanic who cannot read English.
- Contact your factory representative for clarification if any portion of this material is unclear.
- Adhere to the warnings and instructions depicted in the safety decals on the machines.
- Replace any missing or damaged labels.
- Keep warning labels and this operator's manual legible and intact.
- Become familiar with the safe operation of the equipment, operator controls and safety signs.
- Know how to stop the engine and attachments quickly in an emergency.
- Do not operate or allow another person to operate this machine if there are any questions about safety.
- Train all operators and mechanics; the owner is responsible for training the users and for accidents or injuries occurring to themselves, other people or property.
- Never attempt to use a machine that is damaged or has unauthorized modifications.
- Wear appropriate clothing, including long trousers and gloves.
- Do not operate barefoot or wearing open sandals.
- Do not operate with loose clothing, long hair or jewelry which may get tangled in moving parts.
- Wear hearing protection.
- Wear safety glasses with side shields.
- Wear a dust mask to avoid breathing dust.
- Never allow underage children (as defined by local regulations), unskilled or improperly trained people to operate this equipment.
- Do not operate machine while under the influence of drugs, alcohol, or any other condition of impairment.
- The owner/user can prevent and is responsible for accidents or injuries occurring to themselves, other people or property.

Site preparation and circumstances

- Evaluate the terrain to determine how to safely perform the job.
- Evaluate the terrain to determine what accessories and attachments are needed to properly and safely perform the job.
- Only use accessories and attachments approved by the manufacturer.
- Identify and mark buried objects such as sprinkler heads, stakes, water valves, sewer pipes, water pipes, electric wires, etc.
- Remove all objects or debris from the area that may be picked up or thrown by the machine.
- Keep pets and people, especially young children, away from the area and immediately cease operation of the equipment if any enter the area.
- Operate only in daylight or in good artificial light.

Machine Preparation

- Do not tamper with or defeat safety devices; they exist for your protection.
- Keep guards, shields and interlocked safety devices in place and in proper working condition.
- Keep all fasteners—nuts, bolts and pins—secured.
- Visually inspect tines for wear or damage and replace worn or damaged parts.
- Verify that machine and attachments, if any, are in good operating condition.
- Do not engage tines until ready to aerate.

OPERATION SAFETY

GENERAL

- Use extra care when loading or unloading the machine into a trailer or truck. Never pick up or carry the machine when the engine is running.
- Use caution when making turns and crossing roads and sidewalks. Stop tines when not aerating.
- Do not run the engine in an enclosed area where dangerous carbon monoxide fumes can collect.
- Never leave a machine unattended. Always turn off tines and stop engine when leaving the operator position.
- Use extreme caution when reversing or pulling machine towards you.
- Remove debris from mufflers and engine to help prevent fires.

Operating On Slopes

Use Extra Care When Working On Slopes

- All slopes require extra caution.
- Evaluate the risks involved before operating on slopes
- Do not operate on slopes if uneasy or uncertain. Ultimate responsibility for safe operation on slopes rests with the operator.
- Do not operate on steep slopes.
- Keep all movement on slopes slow and gradual.
- Do not aerate near drop-offs, ditches or embankments. Uneven terrain can overturn a machine or cause it to slide.
- Do not turn on slopes unless necessary, and then turn slowly and downhill when possible.
- Be sure of your footing on slopes.

Interrupting Operation

- Before leaving the operator's position for refueling, project end, or transport:
  - Park on level ground
  - Release control handle
- - Lift up on the tine lowering handle
  - Shut off the engine
  - Wait until tines stop moving
- Before inspection, maintenance, or repair:
  - Park on level ground
  - Release control handle
  - Shut off the engine
  - Wait until tines stop moving
  - Disconnect spark plug wires
- When not aerating or crossing surfaces other than grass:
  - Release control handle
  - Lift up on the tine lowering handle
- Reduce the throttle setting during engine shut-down and, if the engine is provided with a shut-off valve, turn the fuel off at the conclusion of operation.

CAUTION

Some repairs or adjustments require the engine to be running. Keep hands and feet clear of moving parts in these circumstances.

MAINTENANCE SAFETY

GENERAL

- Maintain machine according to manufacturer's schedule and instructions for maximum safety and best results.
- Park machine on level ground.
- Never allow untrained personnel to service machine.
- Guards should only be removed by qualified maintenance technicians for maintenance/service. Replace when work is complete.
- Adjust or repair only after the engine has been stopped and the tines have stopped moving.
- Disconnect spark plug wire(s) before doing any maintenance.
- Replace parts if worn, damaged or faulty. For best results, always replace with parts recommended by the manufacturer.
- Do not dismantle the machine without releasing or restraining forces which may cause parts to move suddenly.
- Provide adequate support for lifted machine or parts if working beneath.
- Do not put hands or feet near or under rotating parts.
- Clean up spilled oil or fuel thoroughly.
- Replace faulty mufflers.
- To reduce fire hazards, keep the engine, muffler, and fuel storage area free of grass, leaves, debris buildup or grease.

AERATOR

Tines

The aerator tines are sharp and can cut. Use extra caution when handling. Remove obstructions with care. Wrap the tines or wear gloves.

- Only replace tines. Never straighten or weld.
- Keep other persons away from tines.

Fuel

WARNING

- Use extra care when handling fuels; they are flammable. Gasoline vapors are explosive.
- Store only in containers specifically designed for fuel.
- When refueling or checking fuel level:

  -Stop the engine and allow to cool
  -Do not smoke
  -Refuel outdoors only
  -Use a funnel
  -Do not overfill
  -Clean up all spills and wait for vapors to clear before starting the engine

To prevent static electricity sparks:

- Keep containers electrically grounded; flowing fuel can generate static electricity.
- Refill fuel containers on the ground away from the vehicle; do not fill containers in a vehicle or on a truck or trailer bed with a plastic liner.
- When practical, remove equipment from the truck or trailer and refuel it on the ground.
- If equipment must be refueled on the truck or trailer, refuel from a portable container rather than a dispenser nozzle.
- Keep the dispenser nozzle in contact with the rim of the fuel tank or container opening until fueling is complete.
- Do not use a nozzle lock-open device.
- Replace caps on fuel cans and tanks securely.
- Change clothing immediately if fuel is spilled on it.

Storage Safety

- Stop the engine and allow to cool before storing.
- Drain the fuel tank outdoors only.
- Store fuel in an approved container in a cool, dry place.
- Keep the machine and fuel containers in a locked storage place to prevent tampering and to keep children from playing with them.
- Do not store the machine or fuel container near heating appliances with an open flame, such as a water heater, or an appliance with a pilot light.
- Keep gasoline storage area free of grass, leaves and excessive grease to reduce fire hazard.
- Clean grass and debris from cutting units, drives, mufflers and engine to help prevent fires.

DANGER
-ROTATING BLADE
-KEEP HANDS AND FEET AWAY

WARNING
BEFORE STARTING:
-Read and understand Operator manual and labels.
-Wear hearing and eye protection.
-Replace labels and Operator manual if lost or damaged.
ADVERTENCIA
Antes de comenzar:
-Lea y entienda el manual del operador y las etiquetas.
-Pide que alguien lea y explique el manual y las etiquetas a usted si usted no lee Inglés.
-Use protección ocular y auditiva.
-No haga funcionar sin los protectores en su lugar.
-Pare el motor antes de dar servicio
-La gente a más durante la operación.
4165977

WARNING
- ROTATING PARTS.
- DO NOT OPERATE WITH COVER REMOVED
4168760

AERATOR

FUEL SHUT OFF (A) - Move to the “OFF” position to shut off the fuel whenever transporting the machine by trailer, truck or during storage. Move to the “ON” position before starting the engine.

SWITCH (B) -
Move to the “OFF” position to stop the engine.
Move to the “ON” position before starting engine.

CHOKE (C) -
Move to the “CHOKE” position to apply the choke.
Move to the “RUN” position to remove the choke.

THROTTLE (D) - Push throttle forward.

CONTROL HANDLE (E) -
Squeeze control handle completely to engage wheels and tines to propel unit forward.

TINE HANDLE (F) - Push down on the tine lowering handle to place tines in the turf. Pull up on the tine handle to raise the tines out of the turf for transport.

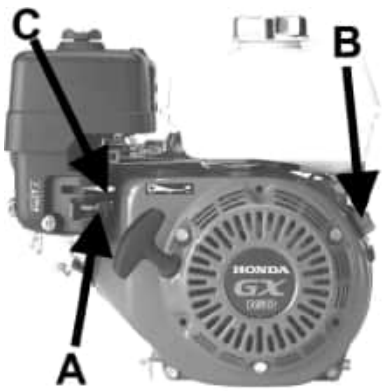

DRUM AND DRUM PLUG (G AND H) -

Turn off the fuel on the engine, engage the tine lock, and tilt the machine backward so the handle rests on the ground. Rotate drums (G) so the plugs (H) are easily accessible. Lift the metal loop handle so it is perpendicular to the drum surface. Twist to unscrew and remove from the fill port. After filling the drum, insert the plug and turn the handle to tighten. Once sealed, push down the metal loop handle so it is parallel to the drum surface.

PRE-OPERATION CHECK LIST
(Operator's responsibility)

- Review and follow all safety rules and safety decal instructions.
- Check that all safety decals are installed and in good condition. Replace if damaged.
- Check to make sure all shields and guards are properly installed and in good condition.
- Check that all hardware is properly installed and secured.
- Check to be sure engine is free of dirt and debris. Pay particular attention to the cooling fins, governor parts and muffler. Clean air intake screen. Check air cleaner; service is necessary.
- Inspect area. Remove stones or other hard objects that might cause damage.
- Check that there are no underground utilities and sprinkler heads in work area.
- Check all lubrication points and grease as instructed in manual.

BEFORE STARTING THE ENGINE

1. Be familiar with the controls, how each functions, and what each operates.
2. Check engine oil level. Add oil if necessary, following the engine manufacturer's recommendations. Refer to engine manual supplied with machine.

READ SAFETY SIGNS

⚠ WARNING

ALL GUARDS MUST BE IN PLACE WHILE MACHINE IS IN OPERATION.

⚠ WARNING

KEEP HANDS AND FEET AWAY FROM MOVING PARTS.

Starting Engine

1. Refer to engine manual supplied with machine.
2. Turn fuel shut off valve to the ON position.
3. Turn choke to CHOKE position.
4. Turn switch to ON position.
5. Pull recoil starter rope until engine starts.
6. After engine is warm, turn choke to RUN position.
7. Allow engine to run one minute before aerating.

AERATOR

WARNING

Operating Aerator

1. Start engine.
2. Make sure the rear tires are in the up position (tines not touching ground). Slowly pull back on the control handle(s). Figure 1

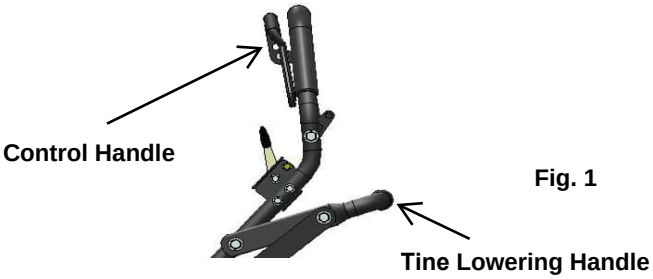

Fig. 1

3. Move aerator to the work area.
4. Release control handle, unlatch the tine lock (see Figure 2) and push down on tine lowering handle putting tines in the turf.

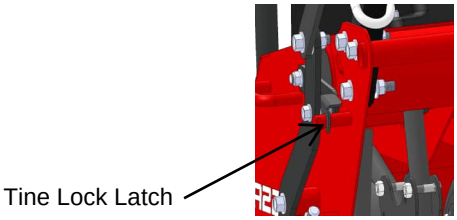

5. Pull back slowly on the control handle to begin aerating. For maximum penetration into turf, apply downward pressure on handle. This model has three tine hubs that drive independently to allow for easier turning.
6. When finished aerating, release control handle, wait for tines to stop moving, pull up on lowering handle to remove tines from turf and move wheels into transport position.

Stopping Engine

1. Release control handles.
2. Throttle down.
3. Switch to OFF
4. Fuel Shut Off Valve to OFF

Daily Maintenance

- Perform daily maintenance checks to keep the aerator in good operating condition.
- Check for worn or deteriorating components that could create a hazard.
- Use genuine Classen parts or parts with equivalent characteristics including type, strength, and material when replacement parts are required to avoid product malfunction and injury to the operator and/or bystanders.
- Keep all safety decals legible, remove grease, dirt and debris; replace illegible decals immediately.
- Do not operate equipment without shield(s) in place.
- Do not make any adjustments or perform any maintenance while the engine is running.
- Clean all tines inside and out when aerating is completed and apply a light coat of oil to prevent rust on tines.
- Always lubricate Aerator each time it is put into service. Wipe off lubrication fittings before and after each lubrication. The number of lubrication fittings vary depending on model of Aerator.
- Keep belt(s) free of oil and dirt.

⚠ WARNING ⚠

SAFETY WARNING: TO PREVENT POSSIBLE EXPLOSION OR IGNITION OF VAPORIZED FUEL, DO NOT STORE EQUIPMENT WITH FUEL IN TANK OR CARBURETOR OR NEAR OPEN FLAME (I.E. FURNACE, WATER HEATER, PILOT LIGHT).

STORAGE INSTRUCTIONS

Before the Aerator is put into storage for any period exceeding 30 days, the following steps should be taken.

1. Follow the storage instructions included in the engine manufacturer's owner's manual.
2. Lubricate all lubrication fittings.

REMOVE FROM STORAGE

1. Check for loose parts and tighten if necessary.
2. Check for cracked or broken tines and replace.
3. Fill fuel tank.
4. Check oil levels with engine on a flat surface. (refer to Engine Manufacturer’s Owner's Manual)
5. Start engine.
6. Check for fuel leaks.
7. Check operation of control handle(s) to make sure unit stops when lever is released.
8. Aerator is equipped with fuel shut-off valve, close valve before transporting.

AERATOR

LUBRICATION
Grease the four tine bearings at the start of the season and every 25 hours.

ENGINE MAINTENANCE
(Refer to engine manufacturer's owners manual) Check engine and gear reduction case oil level with engine resting in a level position. Inspect air filter element and replace if necessary.

CLUTCH CABLE
The belt should be fully de-clutched from the engine pulley when bail is released. If cable needs to be tightened, remove nut on bail and raise connecting bolt to the 2nd or 3rd hole as seen in Figure 1

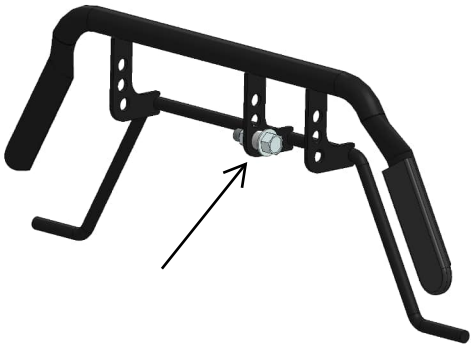

Fig. 1

CHAIN
The roller chain should have 1/8" - 1/4" deflection at the center point between the rear tine shaft sprocket and the front wheel shaft sprocket. To adjust, tighten or loosen the 3/8" bolt under the pulley guard as seen in Figure 2.

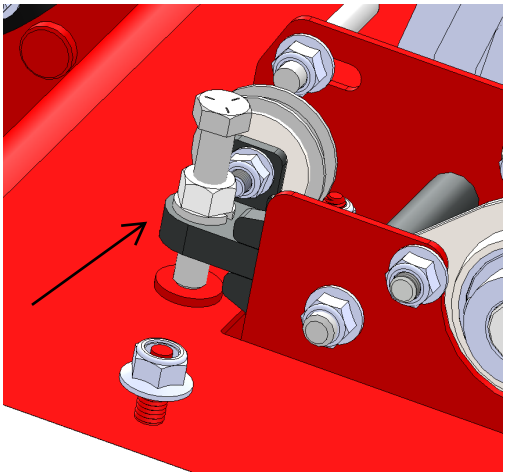

Fig. 2

TINE DEPTH CONTROL
The depth control that the tine can penetrate the ground can be controlled using the depth control bolts on both sides of the unit as shown in Figure 3. Set both bolts to the desired depth by turning nylock nut to proper location and locking in with the other nut. Depth can be set from 1-1/4" to 3".

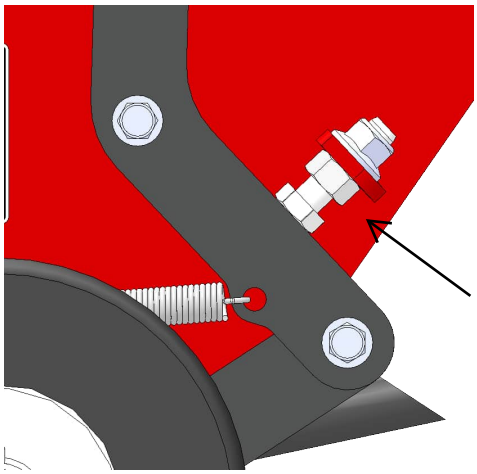

Fig. 3

(Intentionally Blank)

PARTS SECTION

AERATOR

FIGURE 1

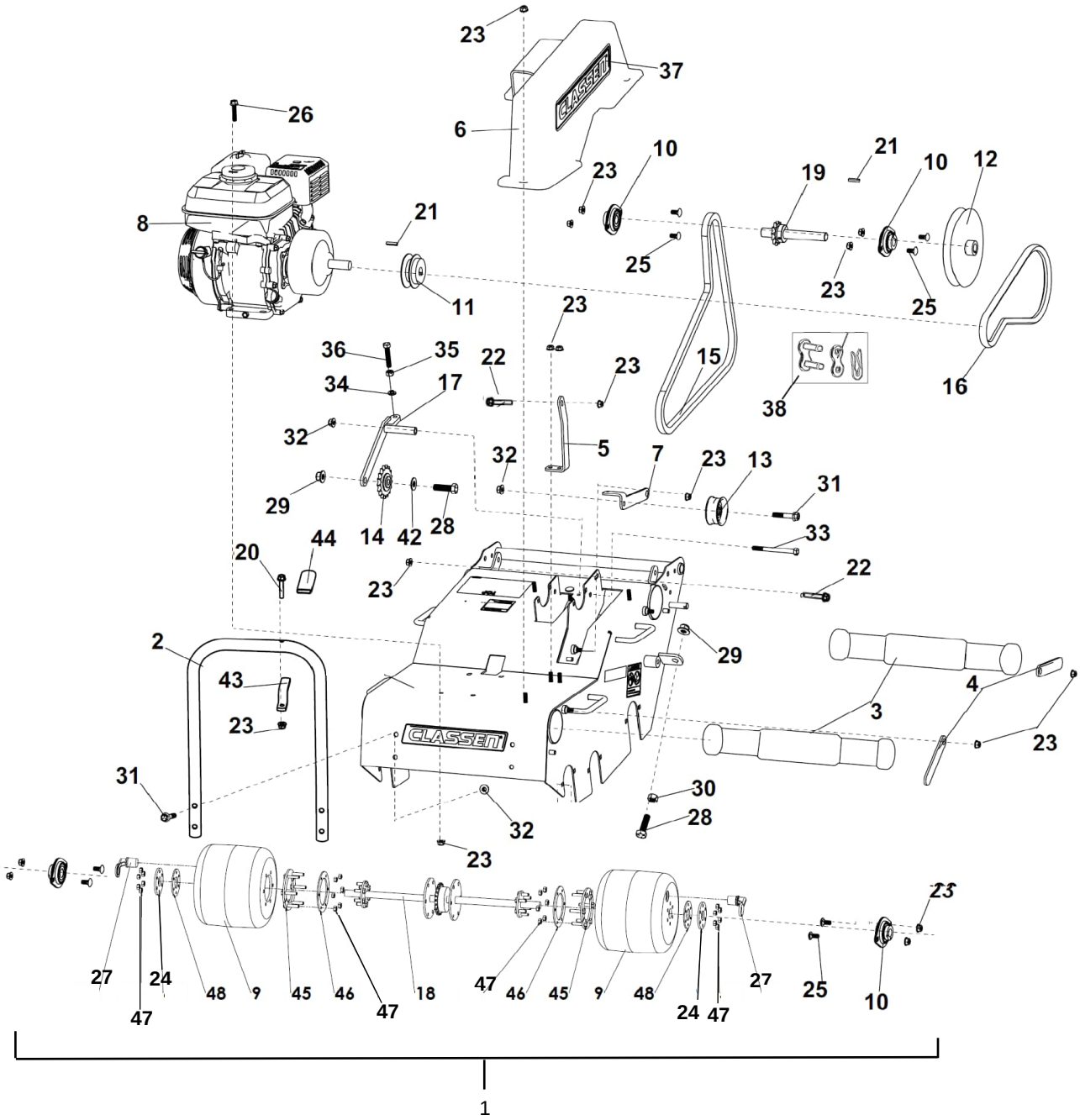

AERATOR

FIGURE 1

ITEM	PART NO.	DESCRIPTION	QTY
1	920-0010	S-DRUM KIT, TA22 (INCLUDES 9,10, 23, 24, 25, 45, 46, 47, 48)	1
2	4179291.7	BUMPER, FRONT	1
3	4171971	WEIGHT, 2.7” x 17.25”	2
4	4171955.7	WEIGHT STOP SWING ARM	2
5	4171956.7	BELT GUARD TAB	1
6	4173220	S-PULLEY GUARD ASSEMBLY (INCLUDES ITEM 37)	1
7	4171970.7	ARM, BELT TIGHTENER	1
8	C100037	HONDA ENGINE, 4.0 HP	1
9	200-0004	Drum, Front TA22	2
10	4172665	4 BEARING - 3/4” SET	4
11	C100420	PULLEY 3”	1
12	4172664	PULLEY - BK72-3/4	1
13	C100010	PULLEY, IDLER	1
14	C100043	SPROCKET, #40x17x1/2 IDLER	1
15	4173083	CHAIN, #40 X 111 PITCH	1
16	4173082	BELT-AK34	1
17	4173077.7	WLDMT-CHAIN TENSIONER	1
18	300-0001	WLMDT, Shaft, Front Drum TA22	1
19	4171995	WLDT -7” SHAFT W/ SPROCKET	1
20	94262-019	HEX HD, 5/16-18X1-3/4	1
21	C500011	KEY, 3/16 SQUARE X 1	2
22	94123-056	HEX HD, 5/16-18X2	2
23	94229-02	NUT-FL NYLON LOCK 5/16-18	23
24	C100083	PLT, SMALL INNER	2
25	94018-9	BLT-CRG 5/16-18 X 3/4	8
26	94262-009	BLT-FLG HD 5/16-18 X 1-1/2	4
27	C100109	WATER PLUG	2
28	94123-235	BOLT, 1/2-13 x 1-3/4	3
29	94268-05	NUT-FL NYLON LOCK 1/2-13	3
30	94025-09	NUT, 1/2-13	2
31	94262-014	BLT-FLG HD 3/8-16 X 2	5
32	94268-03	NUT-FL NYLON LOCK 3/8-16	6
33	94123-139	BOLT, 3/8 x 4	1
34	94006-03	WASHER, 3/8 Lock	1
35	94025-05	NUT, 3/8-16	1
36	94123-345	BOLT - 3/8-16 X 2 FULL THREAD	1
37	4171963	LABEL-CLASSEN Black Flat	1
38	C100025	LINK-#40 CONNECTING	1
39	B222522	DEFLECTOR, EXHAUST	1
40	4169766	SCREW-TAPPING #6 X 1/2	2
41	94262-019	BLT-FLG HD 5/16-18 X 1-3/4	1
42	94163-114	WASHER, 1/2 FLAT WEIGHT	1
43	C300081.7	STOP	1
44	C100007	GRIP-BRAKE	1
45	C700011	PLT WITH STUDS, INNER HALF	4
46	C100084	LARGE RUBBER GASKET	2
47	94151-15	HEX LOCK NUT, 5/16-18	24
48	C100087	SMALL RUBBER GASKET	2

HANDLE & CONTROL ASSEMBLY

AERATOR

FIGURE 2

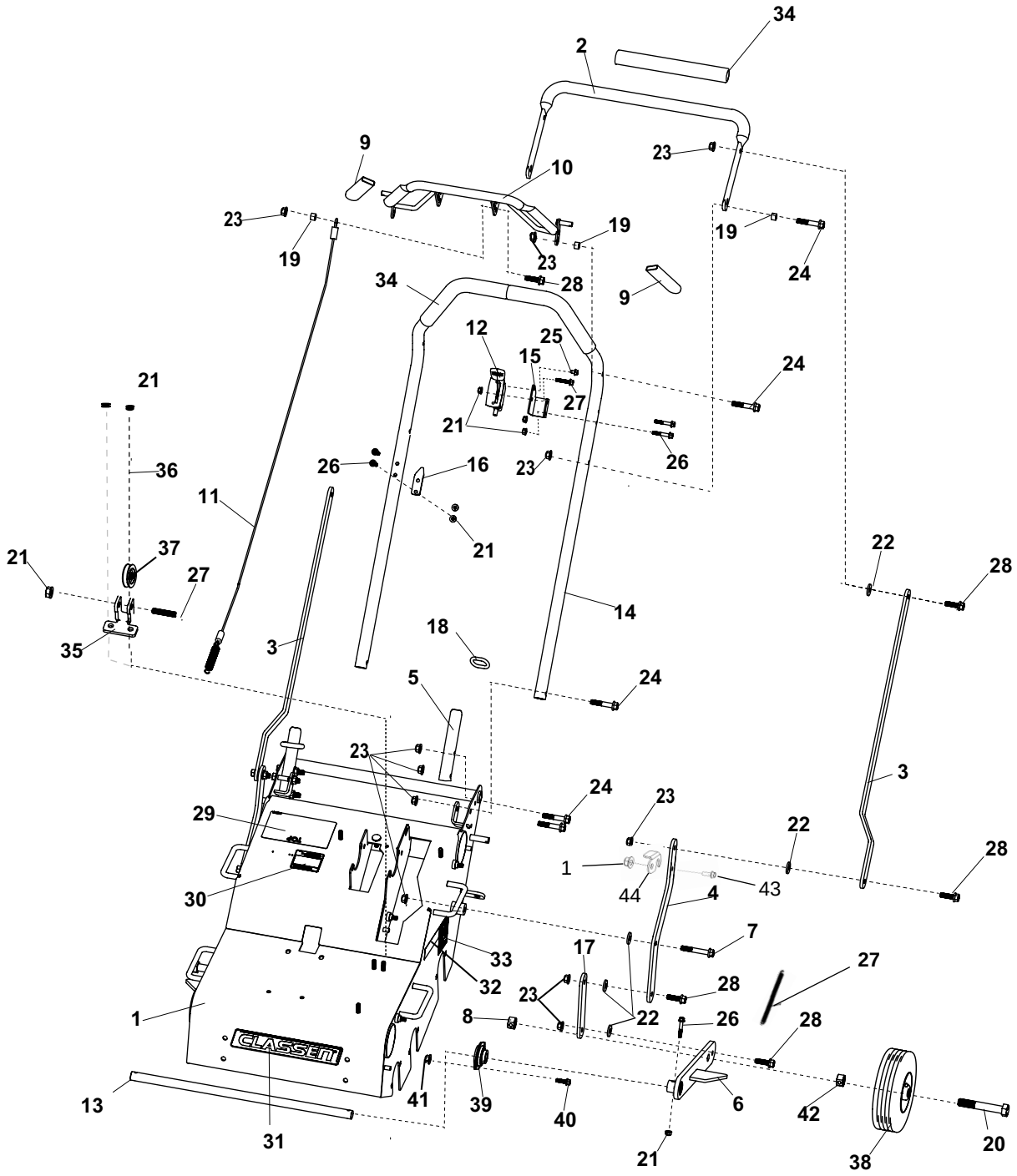

HANDLE & CONTROL ASSEMBLY

FIGURE 2

ITEM	PART NO.	DESCRIPTION	QTY
1	94151-15	HEX LOCK NUT, 5/16-18	1
2	920-0005	S-TA22 HANDLE LIFT ASSEMBLY (INCLUDES ITEM 34)	1
3	4179293.7	ARM LINKAGE	2
4	4171958.7	LIFT HANDLE PIVOT	2
5	4171952.7	HANDLE ATTACHMENT BAR	2
6	4171969.7	WLDT - AXLE SUPPORT	2
7	94262-025	BLT-FLG HD 3/8-16 X 2-1/2	2
8	94229-06	NUT-NYLON LOCK 5/8-11	2
9	C100007	GRIP	2
10	920-0006	S-TA22 TENSION ENGAGEMENT HANDLE (INCLUDES ITEM 9)	1
11	4179294	S-CLUTCH CABLE KIT	1
12	4166170-05	CABLE-THROTTLE 38”	1
13	900-0054	ROD, TA22 PIVOT BRACE	1
14	920-0008	S-MAIN HANDLE KIT (INCLUDES ITEM 34)	1
15	4172038.7	BRACKET THROTTLE CABLE	1
16	4172558.7	HANDLE HOOK	1
17	4171960.7	BAR, REAR WHEEL SUPPORT	2
18	C100251	RING-HANDLE LOCK	2
19	4172652	SPACER - 9/16 OD x 3/8 ID x 3/8 L	5
20	94123-206	BLT, 5/8-11 x 4-1/2	2
21	94268-01	NUT-FL NYLON LOCK 1/4-20	10
22	4172961	WASHER-UHMW PE 3/8” x 1”	10
23	94268-03	NUT-FL NYLON LOCK 3/8-16	21
24	94262-014	BLT-FLG HD 3/8-16 X 2	10
25	94152-23	SCREW-SP 1/4-20X3/8	1
26	94262-005	BLT-FLG HD 1/4-20 X 1-1/2	6
27	C100040	FRAME SPRING	2
28	94262-012	BLT-FLG HD 3/8-16 X 1-1/4	9
29	4165977	LABEL-READ MANUAL/SPANISH	1
30	4168760	LABEL WARNING - HAND PINCH	1
31	4170717	DECAL-SM CLASSEN FLAT	1
32	821-0001	LABEL- TA22	2
33	20942	LABEL-DANGER	2
34	4173160	GRIP - 1” X 10”	3
35	C300107.7	BRKT-PULLEY MOUNTING	1
36	94163-128	WSHR-1/4” FENDER	2
37	C100270	PULLEY, CLUTCH CABLE	1
38	C100031	TIRE ASSY, 8” REAR	2
39	4172665	BEARING - 3/4” FLUSHMOUNT	2
40	94018-9	BLT-CRG 5/16-18 x 3/4	4
41	94269-02	NUT FL NYLON LOCK 5/16-18	4
42	C500302	NUT-JAM 5/8-11	2
43	94262-007	HEX HD FL BOLT, 5/16-18X1	1
44	900-0006	SAFE TINE LOCK	1

ITEM	PART NO.	DESCRIPTION	QTY

FIGURE 3

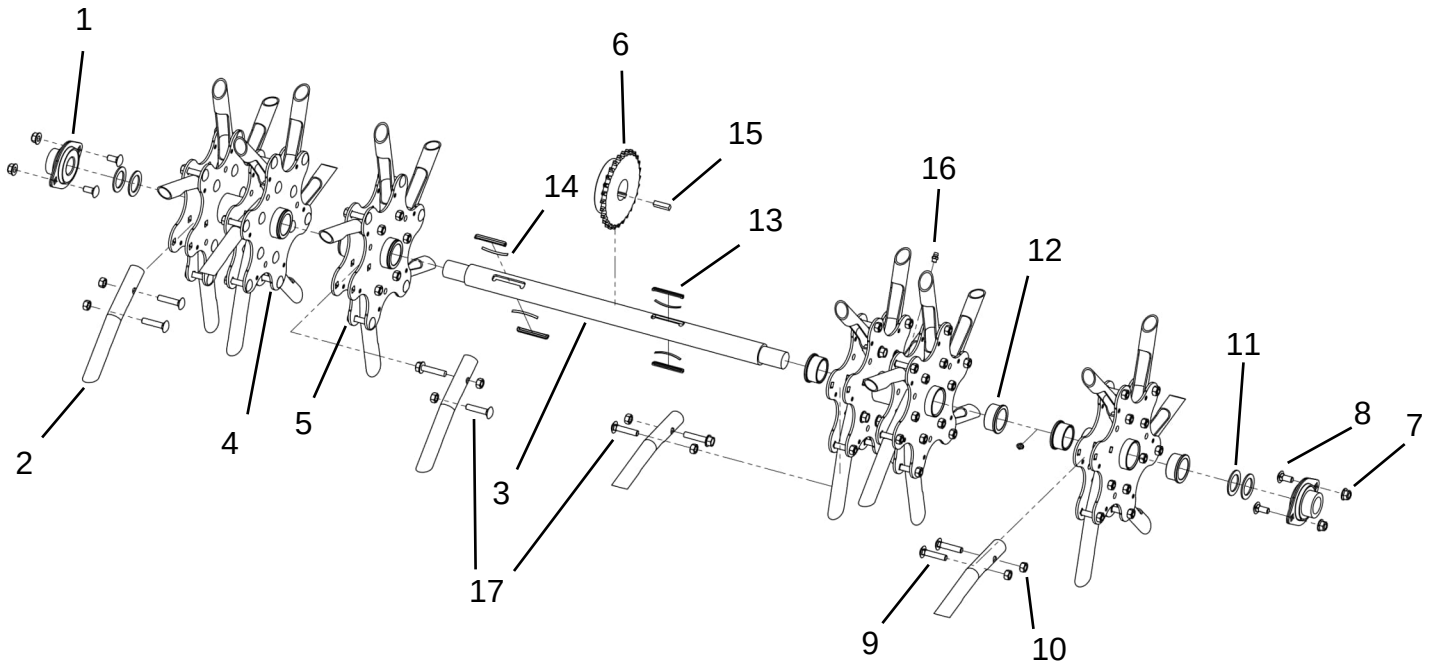

AERATOR

FIGURE 3

ITEM	PART NO.	DESCRIPTION	QTY
1	4172666	BEARING - 1” FLUSHMOUNT SET	2
2	C100032.7	TINE, PLUGGING	36
3	900-0009	SHAFT-TINE TA22H	1
4	4173027.7	WLDMT-HUB ASSY,DOUBLE	2
5	4173030.7	WLDMT-HUB ASSY, CENTER	2
6	4173031	SPROCKET, 28 TEETH #40 1.25”ID	1
7	94268-02	NUT-FL NYLON LOCK 5/16-18	4
8	94018-9	BLT-CRG 5/16-18 X 3/4	4
9	94018-34	BLT-CRG 5/16-18 X 1-1/2	60
10	94151-15	NUT, 5/16-18 LOCK	72
11	64163-64	WSHR 1.015X1.500X14GA	4
12	4171760	BUSHING-FLANGED	8
13	4171756	KEY-OVERRUN	4
14	4171757	SPRING-LEAF	4
15	C500004	KEY-1/4 X 1 SQUARE	1
16	85010N	ZERK 1/4-28 STR SELF THREAD	4
17	94229-009	BLT-FLG HD 5/16-18X1-1/2	12
18	920-0009	S-TINE BANK ASSEMBLY (INCLUDES ITEMS 1-17)	1

ITEM	PART NO.	DESCRIPTION	QTY

Classen Warranty Statement

2-Year Limited Warranty

This Classen Product is warranted against defects in materials and workmanship for a period of two (2) years from the date of purchase from an authorized dealer under the following terms and conditions. Schiller Grounds Care's responsibility under this limited warranty is restricted to repairing or replacing, at its option, any covered part found to be defective in material or workmanship during the warranty period. All parts replaced under warranty will be considered as part of the original product and any warranty on the replaced parts will expire coincidentally with the original product warranty.

SCHILLER GROUNDS CARE, INC. MAKES NO EXPRESS OR IMPLIED WARRANTIES, REPRESENTATIONS, OR PROMISES EXCEPT THOSE CONTAINED HEREIN. THERE ARE NO OTHER WARRANTIES, INCLUDING WARRANTIES OF MERCHANTABILITY AND FITNESS FOR A PARTICULAR PURPOSE. ALL WARRANTIES OTHER THAN THE EXPRESS WARRANTY SET FORTH ABOVE ARE SPECIFICALLY DISCLAIMED. THE DURATION OF ANY IMPLIED WARRANTY, INCLUDING MERCHANTABILITY AND FITNESS FOR A PARTICULAR PURPOSE, IS LIMITED TO THE DURATION OF THIS WRITTEN LIMITED WARRANTY.

To Obtain Warranty Service - Warranty service must be performed by an authorized Classen dealer. To locate a dealer, please visit: www.classenturfcare.com and click on FIND A DEALER. For further assistance, write or email the Technical Services Department of Schiller Grounds Care

Schiller Grounds Care, Inc.
1028 Street Road
Southampton, PA 18966
techservicesupport@schillergc.com

ABOUT YOUR WARRANTY

The warranty period begins on the date of purchase by the original retail or commercial customer from an authorized Classen dealer and is not transferable. Warranty service must be performed by an authorized Classen dealer. If a warranty replacement becomes necessary, the authorized dealer must be prepared to provide the physical component for verification (freight prepaid) upon request from Schiller Grounds Care. Warranty service will be performed without charge to the original purchaser for parts and labor. The original purchaser is responsible for the expense of delivering the equipment, part, or accessory to and from an authorized dealer's service center. The purchaser is responsible for any premium charged for overtime labor requested by the purchaser and for any service and/or maintenance not directly related to any defect covered under this limited warranty. Proof of purchase will be required to substantiate any warranty claim. Without proof of the initial purchase date from an authorized dealer, the manufacturing date of the product will be used to establish the warranty period.

EXCLUSIONS

This warranty only covers defects in materials or workmanship.

Engines and Other Manufacturers - Schiller Grounds Care makes no warranty with respect to engines or engine parts such as spark plugs, lubricants, starters, and carburetors. The engine warranty is covered by the engine manufacturer. Consult the Operator's Manual for the engine provided with your product or ask an authorized dealer for the terms and conditions of these warranties. Schiller Grounds Care makes no warranty with respect to other parts not of its manufacture such as tires, batteries, gearboxes, or similar. These other parts may be covered by the warranties of their respective manufacturers.

Wear Items - This limited warranty does not cover damages or defects from normal wear and tear. This limited warranty does not include routine maintenance and normal maintenance parts, including but not limited to tires, batteries, transmissions, clutches, filters, gearboxes, blades, tines, belts, chains, cables, or bearings.

Negligence and Improper Maintenance or Repair - This limited warranty does not cover any equipment that has been subject to lack of reasonable and proper maintenance, misuse, lack of proper storage, or accidents. This limited warranty does not cover any damage to the equipment that is caused by a freight carrier or is the result of failure to follow the operating instructions within the Owner's Manual. This limited warranty does not cover any defects due to repairs, modifications, or alternations made to the product by anyone other than Schiller Grounds Care or its authorized dealers. In addition, this limited warranty does not cover repairs made necessary due to a lack of proper protection during storage. This limited warranty does not cover damage caused by the use of parts, supplies, or accessories, including, without limitation, filters, spark plugs, carburetors, ignition, drive belts, brakes, gasoline, fuel, oil, or lubricants, which in the reasonable judgment of Schiller Grounds Care, are either incompatible with the product, adversely affect its operation, performance, durability or are other than as recommended in the Operator's Manual or other operational instructions provided by Schiller Grounds Care.

Classen Warranty Statement

Improper Use - This limited warranty does not cover any Classen Product, part, or accessory that (i) has been subject to misuse, abuse, neglect, negligence, or accident, or that has not been assembled, operated, or maintained in accordance with the operating or maintenance instructions specified in the Operator's Manual; or (ii) has been altered or modified so as to adversely affect its operation, performance or durability, or that has been altered or modified in ways not approved by Schiller Grounds Care. To the extent permitted by law, neither Schiller Grounds Care nor any company affiliated with it makes any warranties, representations, or promises as to the quality, performance, or freedom from defect of the Classen Product, part, or accessory covered by this limited warranty. The authorized dealer makes no warranty of its own and such dealer has no authority to make any representation, warranty, or promise on behalf of Schiller Ground Care or to modify the terms or limitations of this limited warranty in any way.

Other Exclusions - This limited warranty does not include reconditioned, refurbished, used, or demonstration equipment. This limited warranty excludes failures due to acts of nature beyond the manufacturer's control.

Extended Warranty - Schiller Grounds Care disclaims responsibility for any separately purchased extended warranty. ALL WARRANTIES OTHER THAN THE EXPRESS WARRANTY SET FORTH ABOVE ARE SPECIFICALLY DISCLAIMED. THE DURATION OF ANY IMPLIED WARRANTY, INCLUDING MERCHANTABILITY AND FITNESS FOR A PARTICULAR PURPOSE, IS LIMITED TO THE DURATION OF THIS WRITTEN LIMITED WARRANTY.

Disclaimer of Consequential Damage - Schiller Grounds Care disclaims any responsibility for incidental or consequential damages including, but not limited to, the expense for gasoline, the expense of delivering the product to an authorized service dealer, the expense of returning the product to the purchaser, mechanic's travel time, telephone charges, rental of a like product during the repair timeframe, travel, loss of revenue, loss of time, or inconvenience. SCHILLER GROUNDS CARE, INC. DISCLAIMS ALL LIABILITY FOR INDIRECT, INCIDENTAL, AND/OR CONSEQUENTIAL DAMAGES IN CONNECTION WITH THE USE OF THE CLASSEN PRODUCTS COVERED BY THIS LIMITED WARRANTY. SOME STATES DO NOT ALLOW LIMITATIONS ON HOW LONG AN IMPLIED WARRANTY LASTS AND/OR DO NOT ALLOW THE EXCLUSION OR LIMITATION OF INCIDENTAL OR CONSEQUENTIAL DAMAGES, SO THE ABOVE LIMITATIONS AND EXCLUSIONS MAY NOT APPLY TO YOU. THIS WARRANTY GIVES YOU SPECIFIC LEGAL RIGHTS, AND YOU MAY ALSO HAVE OTHER RIGHTS WHICH VARY FROM STATE TO STATE.