CLASSEN®

SOD CUTTER

FOR MODELS with S/N 000101 & UP:

SC-12/5.5	SC-12/8.0
SC-16/5.5	SC-16/8.0
SC-18/5.5	SC-18/8.0
SC-20/5.5	SC-20/8.0
SC-24/5.5	SC-24/8.0

PARTS MANUAL

MAN C100574
Rev. C

SCHILLER GROUNDS CARE

OPERATORS MANUAL C100575

CALIFORNIA

Proposition 65 Warning

Diesel engine exhaust and some of its constituents are known to the State of California to cause cancer, birth defects and other reproductive harm.

⚠ WARNING

The engine exhaust from this product contains chemicals known to the State of California to cause cancer, birth defects or other reproductive harm.

CALIFORNIA

Proposition 65 Warning

Battery posts, terminals, wiring insulation, and related accessories contain lead and lead compounds, chemicals known to the State of California to cause cancer and birth defects or other reproductive harm. **WASH HANDS AFTER HANDLING.**

IMPORTANT MESSAGE

Thank you for purchasing this Classen product. You have purchased a world class product, one of the best designed and built anywhere.

This product comes with Parts and Operator's Manuals. The useful life and good service you receive from this product depends to a large extent on how well you read and understand this manual. Treat this product properly and adjust it as instructed, and it will give you many years of reliable service.

See a Classen dealer for any service or parts needed. Classen service ensures that you continue to receive the best results possible from Classen products. You can trust Classen replacement parts because they are manufactured with the same high precision and quality as the original parts.

Classen designs and builds its equipment to serve many years in a safe and productive manner. For longest life, use this product only as directed in the manual, keep it in good repair and follow safety warnings and instructions. You'll always be glad you did.

Classen
1028 Street Road
Southampton, PA 18966

TABLE OF CONTENTS **FIGURES** **PAGE**

SAFETY 2, 3
SET-UP, MAINTENANCE 4
STORAGE 5
SPECIFICATIONS 6
PARTS SECTION 7
MAIN FRAME ASSEMBLY ..... FIGURE 1 ..... 8, 9
HANDLE & CUTTER ASSEMBLY ..... FIGURE 2 ..... 10, 11
POWER TRAIN ASSEMBLY ..... FIGURE 3 ..... 12, 13
KITS 14
WARRANTY ..... BACK COVER

NOTICE !!!

Unauthorized modifications may present **extreme** safety hazards to operators and bystanders and could also result in product damage.

Classen strongly warns against, rejects and disclaims any modifications, add-on accessories or product alterations that are not designed, developed, tested and approved by Classen Engineering Department. Any Classen product that is altered, modified or changed in any manner not specifically authorized after original manufacture–including the addition of "after-market" accessories or component parts not specifically approved by Classen–will result in the Classen Warranty being voided.

Any and all liability for personal injury and/or property damage caused by any unauthorized modifications, add-on accessories or products not approved by Classen will be considered the responsibility of the individual(s) or company designing and/or making such changes. Classen will vigorously pursue full indemnification and costs from any party responsible for such unauthorized post-manufacture modifications and/or accessories should personal injury and/or property damage result.

This symbol means:
ATTENTION!
BECOME ALERT!

Your safety and the safety of others is involved.

Signal word definitions:

The signal words below are used to identify levels of hazard seriousness. These words appear in this manual and on the safety labels attached to Classen machines. For your safety and the safety of others, read and follow the information given with these signal words and/or the symbol shown above.

⚠ DANGER

DANGER indicates an imminently hazardous situation which, if not avoided, **WILL** result in death or serious injury.

⚠ WARNING

WARNING indicates a potentially hazardous situation which, if not avoided, **COULD** result in death or serious injury.

⚠ CAUTION

CAUTION indicates a potentially hazardous situation which, if not avoided, **MAY** result in minor or moderate injury. It may also be used to alert against unsafe practices or property damage.

CAUTION

CAUTION used without the safety alert symbol indicates a potentially hazardous situation which, if not avoided, **MAY** result in property damage

MODEL NUMBER: This number appears on sales literature, technical manuals and price lists.

SERIAL NUMBER: This number appears only on your machine. It contains the model number followed consecutively by the serial number. Use this number when ordering parts or seeking warranty information.

MAINTENANCE SAFETY

In general

- Maintain machine according to manufacturer's schedule and instructions for maximum safety and best results.
- Park machine on level ground.
- Never allow untrained personnel to service machine.
- Guards should only be removed by qualified maintenance technician for maintenance/service. Replace when work is complete.
- Adjust or repair only after the engine has been stopped and the blade has stopped moving.
- Disconnect spark plug wire(s) before doing any maintenance.
- Replace parts if worn, damaged or faulty. For best results, always replace with parts recommended by the manufacturer.
- Do not dismantle the machine without releasing or restraining forces which may cause parts to move suddenly.
- Provide adequate support, e.g. jack stands for lifted machine or parts if working beneath.
- Do not put hands or feet near or under rotating parts.
- Clean up spilled oil or fuel thoroughly.
- Replace faulty mufflers.
- To reduce fire hazards, keep the engine, muffler, and fuel storage area free of grass, leaves, debris buildup or grease.

Blades

The sod cutter blade is sharp and can cut. Use extra caution when handling. Remove obstructions with care. Wrap the blade or wear gloves.

- Only replace blade. Never straighten or weld.
- Keep other persons away from blades.

Fuel

- Gasoline and diesel fuels are flammable; gasoline vapors are explosive. Use extra care when handling.
- Store only in containers specifically designed for fuel.
- When refueling or checking fuel level:
  - -Stop the engine and allow to cool;
  - -Do not smoke;
  - -Refuel outdoors only;
  - -Use a funnel;
  - -Do not overfill;
  - -If fuel is spilled, do not attempt to start the engine until the spill is cleaned up and vapors have cleared.
  - -Replace caps on fuel containers and tanks securely.

Sparks from static electricity can start fires or cause explosions. Flowing fuel can generate static electricity. To prevent static electricity sparks:

- Keep fuel containers electrically grounded. Do not fill containers in a vehicle or on a truck or trailer bed with a plastic liner. Fill containers on the ground away from the vehicle.
- When practical, remove petrol (gas) powered equipment from the truck or trailer and refuel it on the ground. If equipment must be refueled on the truck or trailer, refuel from a portable container rather than a dispenser nozzle.
- Keep the dispenser nozzle in contact with the rim of the fuel tank or container opening until fueling is complete. Do not use a nozzle lock-open device.

Storage Safety

- Stop the engine and allow to cool before storing.
- Drain the fuel tank outdoors only.
- Store fuel in an approved container in a cool, dry place.
- Keep the machine and fuel containers in a locked storage place to prevent tampering and to keep children from playing with them.
- Do not store the machine or fuel container near heating appliances with an open flame, such as a water heater, or an appliance with a pilot light.
- Keep gasoline (petrol) storage area free of grass, leaves and excessive grease to reduce fire hazard.
- Clean grass and debris from cutting units, drives, mufflers and engine to help prevent fires.

SET UP INSTRUCTIONS

To prevent injury, wear appropriate eye protection and stand clear when cutting banding. Banding is under tension and may snap back when cut.

1. Remove crate top, ends, sides and plastic covering the unit..
   Remove the banding attaching the sod cutter to the pallet.

2. Roll the sod cutter off the pallet. The unit can also be driven off the pallet, but first read the Safety, Controls, and Operation sections of your manuals, then check the oil and add fuel.

3. Dispose of pallet, box, and banding in a responsible manner.

GENERAL MAINTENANCE

To keep the sod cutter in good operating condition, perform the following:

- Keep blade sharp; a sharp blade cuts cleaner, faster and more uniformly and places less load on the machine. Sharpen cutting edge on bevel or top side only.
- Keep drive belt at proper tension and free of oil and dirt at all times.
- Check engine oil level and air filter element daily.
- Check for loose bolts and connections.
- All grease fittings are pressurized type. Use a good grade Lithium Base Grease or equivalent. Grease eccentric arms sparingly every 4 hours of service, all others daily. Wipe off all grease fittings before and after each greasing (there are a total of 8 grease fittings).
- To make sure the chain on the front drive wheels is tight, you will need to remove the chain guard to check this. If tightening is required, loosen nuts and bolts on the 3/4” pillow block bearings and push the bearings toward the back of the sod cutter until chain is tight. Make sure both bearings go back evenly to keep jackshaft running even with the frame. After doing this, retighten nuts and bolts on the bearing and replace the chain guard.
- Engine (refer to manufacturer's owner’s manual).

Engine Oil Level Check

1. BEFORE CHECKING OIL:
   - make certain the engine is level
   - the engine switch is in the OFF position
   - the sod cutter blade is NOT engaged
   - the drive wheels are disengaged.
2. Remove the filler cap/dipstick and wipe it clean.
3. Insert and remove the dipstick without screwing it into the filler neck. Check the oil level shown on the dipstick.
4. If the oil level is low, fill to the edge of the oil filler hole with the recommended oil.
   SAE 10W-30 is recommended for general use.
   Refer to engine oil recommendations in engine manual for other viscosities and information.
5. Screw in the filler cap/dipstick securely.

Transmission Oil Level Check

1. Check the transmission oil level with the engine stopped and in a level position.
2. Remove the filler cap/dipstick and wipe it clean.
3. Insert and remove the dipstick without screwing it into the filler hole. Check the oil level shown on the dipstick.
4. If the oil level is low, add oil to reach the upper limit mark on the dipstick. Use the same oil that is recommended for the engine, SAE 10W-30.
5. Screw in the filler cap/dipstick securely.

STORAGE INSTRUCTIONS

⚠WARNING

To prevent possible explosion or ignition of vaporized fuel, do not store equipment with fuel in tank or carburetor in enclosure with open flame (for example, a furnace or water heater pilot light).

Daily Storage

1. Check engine oil level and air filter element daily.
2. Check oil level in gear case. Hydro gear uses 20W50 oil.
3. Close fuel valve at bottom of fuel tank.
4. Clean cutting blade (grass, dirt, etc.).

Extended Storage

Before the equipment is put into storage for any period exceeding 30 days:

1. Drain all fuel from fuel tank and lines (use a hose or fuel line, routed from fuel tank shut-off to proper container).
2. Start engine and run until all fuel is used from the carburetor float bowl.
3. While engine is warm, check the transmission oil and refill with the proper weight of oil corresponding to the season when the equipment will next be used.
4. Remove the spark plug and squirt a small quantity of engine oil into the cylinder. Turn the engine over a few times to distribute the oil.
5. Lubricate all lubrication fittings.
6. Clean and oil cutting blade to prevent rust.

To put equipment into operation after an extended storage:

1. Fill fuel tank with clean fresh fuel.
2. Check crankcase oil level, and start engine.
3. Check fuel system for fuel leaks.

⚠WARNING

When replacement parts are required, use genuine **Classen** parts or parts with equivalent characteristics, including type, strength and material. Failure to do so may result in product malfunction and possible injury to the operator and/or bystanders.

Carbon monoxide present in the exhaust is an odorless and deadly gas. Never start or run the engine inside where exhaust fumes can collect. Provide enough fresh air to keep fumes from getting too strong.

Replace any warning decal that becomes illegible immediately.

FOR MODELS with S/N 000101 & UP:

SC-12/5.5
SC-16/5.5
SC-18/5.5
SC-20/5.5
SC-24/5.5

SC-12/8.0
SC-16/8.0
SC-18/8.0
SC-20/8.0
SC-24/8.0

ENGINE
Model.....4 cycle 5.5 H. P. Honda Model GX160

4 cycle 8 HP Honda Model GX240

Starter.....Recoil
Governor.....3400 RPM ± 200 RPM, no load
Clutch.....spring loaded belt tightener type

REDUCTION
Engine to blade.....3.03 to1
Engine to drive wheels.....57.2 to 1

WHEELS:
Drive.....8” (203 mm) Dia. w/knobby tread vulcanized to hub
Rear.....8 x 1.75 (203 X 45mm) semi-pneumatic tires

CUTTING WIDTH:
SC-12.....11-3/4”
SC-16.....16”
SC-18.....18”
SC-20.....20”
SC-24.....24”

GEAR CASE
Lubrication.....20W50
Capacity.....31/2Pints(1.7L)

CUTTING DEPTH.....up to 2-1/2”

BLADE PITCH
Hand lever adjustment.....variable 0° to 9°

BLADE SPEED.....1188 RPM @ 3400 engine RPM

DIMENSIONS
Width.....23” - For all, except SC-24 - 25”
Length.....59”
Height.....35”
Wheel Base.....22”

WEIGHT
Dry Weights
SC-12/5.5.....318 lbs.
SC-12/8.....342 lbs.
SC-16/5.5.....324 lbs.
SC-16/8.....348 lbs.
SC-18/5.5.....328 lbs.
SC-18/8.....352 lbs.
SC-20/5.5.....329 lbs,
SC-20/8.....353 lbs.
SC-24/8.....355 lbs.

PARTS SECTION

MAIN FRAME ASSEMBLY

SOD CUTTER

FIGURE 1

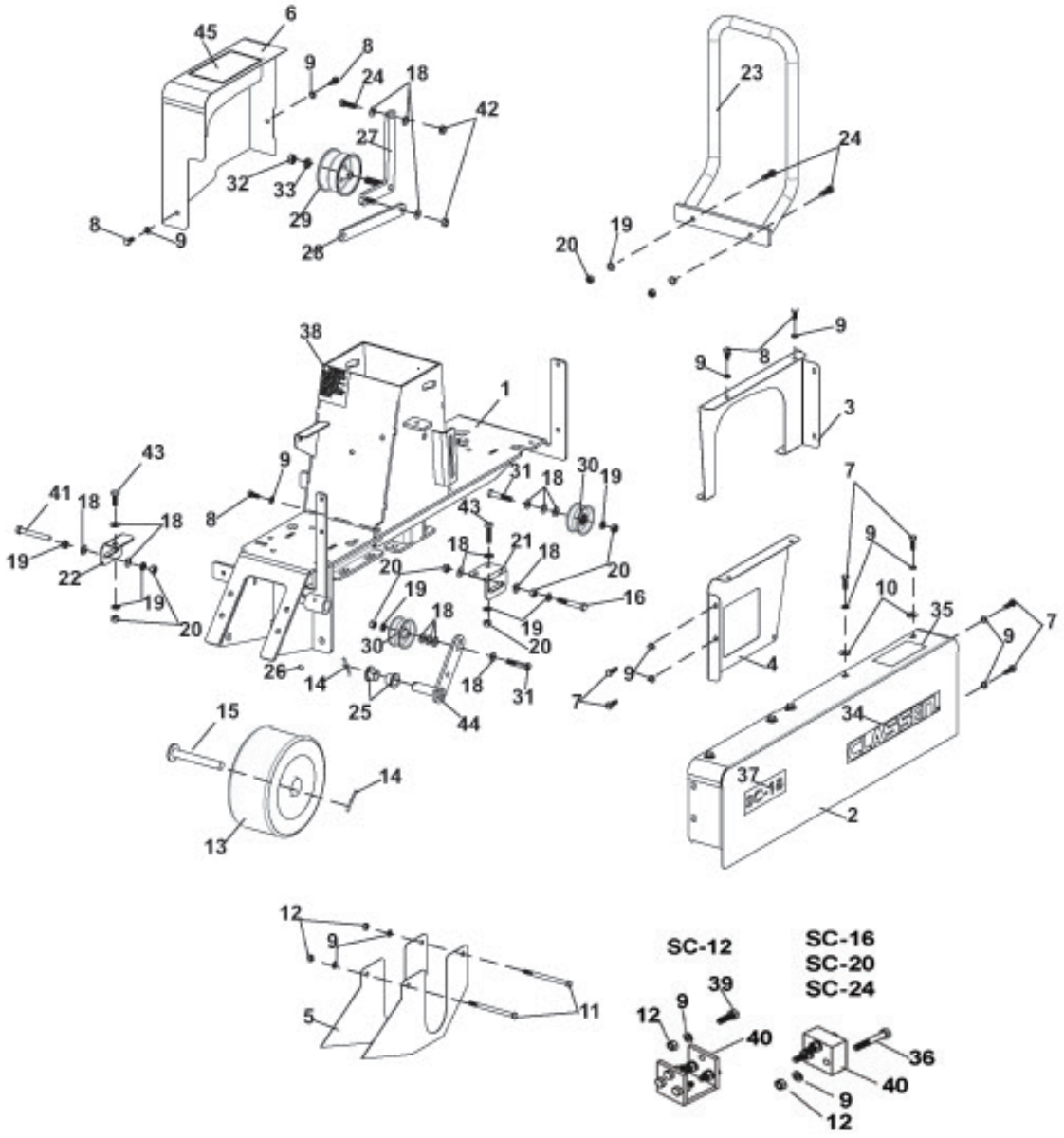

FIGURE 1

ITEM	PART NO.	DESCRIPTION	QTY
1	4172187	S-FRAME, SOD CUTTER	1
2	4171985	S-LARGE GUARD	1
3	C400267.17	INNER ENGINE GUARD, 5.5 HP	1
	C400268.17	INNER ENGINE GUARD, 8.0 HP	
4	C400388.17	TRANSMISION COVER, GEAR	1
5	4173101.17	CHAIN GUARD	1
6	4173102.17	SMALL GUARD	1
7	C500133	BOLT, 5/16-18 x 1	9
8	C500140	BOLT, 5/16-18 x 3/4	5
9	C500115	WASHER, 5/16 LOCK	16
10	C500083	WASHER, 5/16 FLAT	9
11	C500219	BOLT, 5-16-18 x 5	2
12	C500101	NUT, 5/16-18	2
13	C100017	TIRE & WHEEL ASSEMBLY, 9X350X4	1
14	C500016	PIN, 5/32” x 1-1/4” COTTER	2
15	4175196	PIN, AXLE	1
16	C500154	BOLT, 3/8-16 x 2-1/2	1
17	C500146	BOLT, 3/8-16 x 1-1/2	1
18	C500042	WASHER, 3/8” FLAT	15
19	C500130	WASHER, 3/8 LOCK	8
20	C500129	NUT, 3/8-16	10
21	C300004.7	CLIP, R.H. BELT ADJUSTMENT	1
22	C300134.7	CLIP, BELT L.H.	1
23	C400237.17	BUMPER, 8.0 HP	1
	C400236.17	BUMPER, 5.5 HP	
24	C500134	BOLT, 3/8-16 x 1-1/4	5
25	C100021	BUSHING, BRASS	2
26	C500001	GREASE FITTING, 1/4 x 28	8
27	C400114.7	ARM W/ 1/2’ BOLT, DUAL DRIVE	1
28	C300069.7	ARM, DRIVE LINKAGE	1
29	C100208	PULLEY, DUAL DRIVE DOUBLE IDLER	1
30	C100010	PULLEY, IDLER	2
31	C500091	BOLT, 3/8-16 x 2	2
32	C500106	NUT, 1/2-13	1
33	C500006	WASHER, 1/2 LOCK	1
34	4170316	DECAL, CLASSEN	2
35	2000577	DECAL, DANGER	1
36	C500142	5/16” x 2” BOLT (SC-16, SC-20, SC-24)	6
37	C100262	DECAL, “SC-12”	2
	C100417	DECAL , “SC-16”	2
	C100131	DECAL , “SC-18”	2
	C100260	DECAL , “SC-20”	2
	C100345	DECAL , “SC-24”	2
38	C100504	SPARK ARRESTOR DECAL	1
39	C500133	5/16” x 1” BOLT (SC-12)	12
40	C400011	12” BLADE ADAPTOR	2
	C300417	16” BLADE ADAPTOR	2
	C300047	20” BLADE ADAPTOR	2
	C400188	24” BLADE ADAPTOR	2
41	C500159	BOLT, 3/8-16 X3	1
42	C500041	NUT, 3/8-16 LOCK	2
43	C500043	BOLT, 3/8-16 X 1	2
44	C400010.7	ARM, BLADE CLUTCH	1
45	C100559	DECAL-LUBRICATE	1
46	4168760	DECAL-WARNING HAND PINCH	1

ITEM	PART NO.	DESCRIPTION	QTY

*** NOT ILLUSTRATED**

HANDLE ASSEMBLY

SOD CUTTER

FIGURE 2

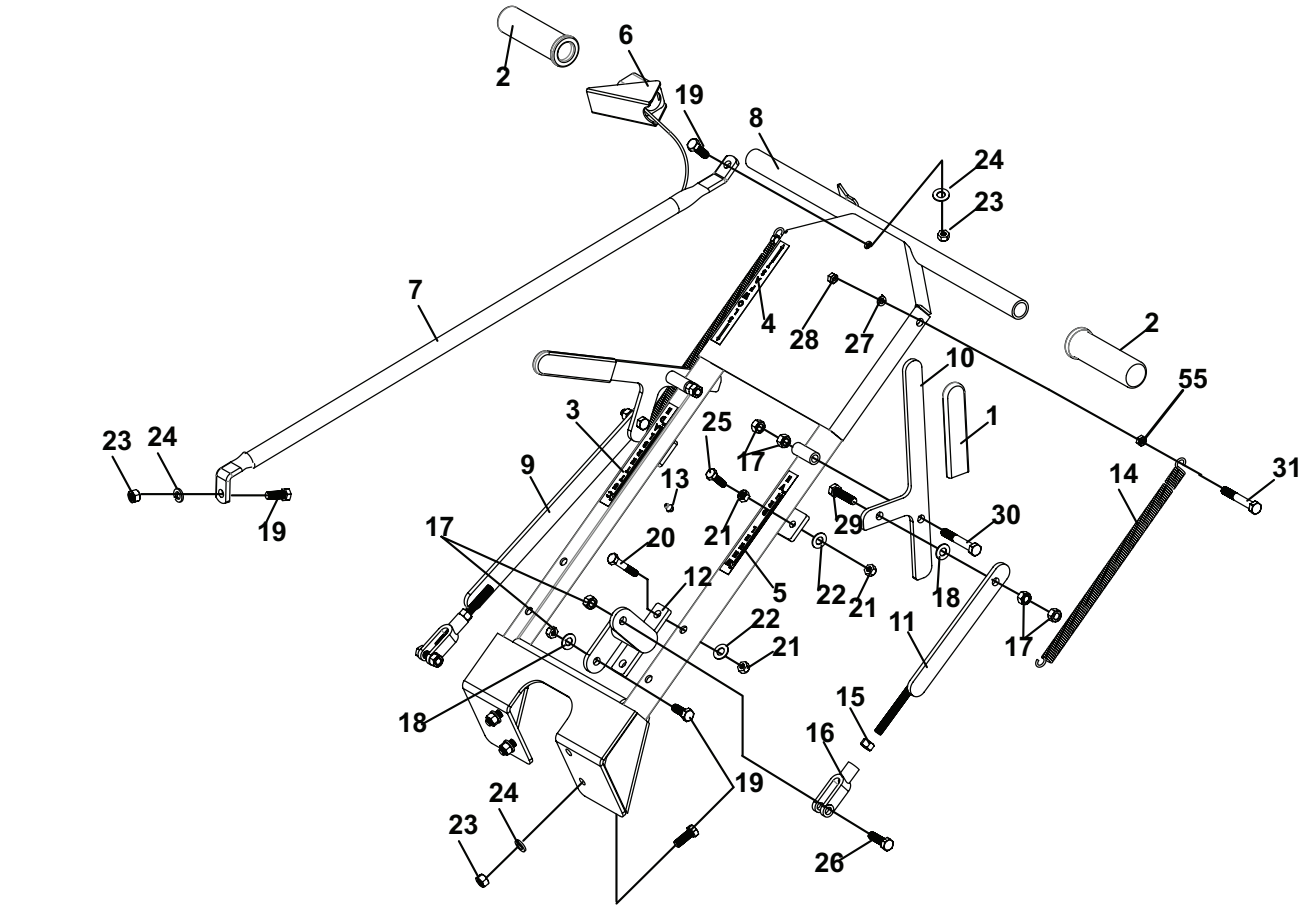

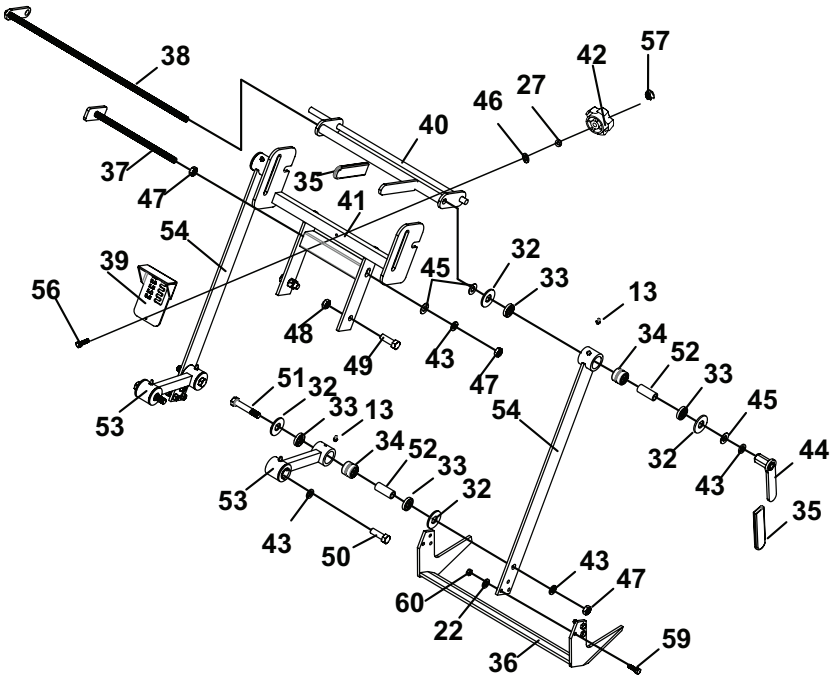

FIGURE 2

ITEM	PART NO.	DESCRIPTION	QTY
1	C100007	GRIP, RUBBER	2
2	C100018	GRIP, L.H. HANDLE	2
3	C100132	DECAL, CUTTER BLADE	1
4	C100133	DECAL, SLOW / FAST	1
5	C100134	DECAL, WHEEL DRIVE	1
6	C100486	THROTTLE CONTROL & CABLE	1
7	C300138.17	BRACE, HANDLE	1
8	4172184	S-HANDLE, MAIN	1
9	C400007.17	ARM, CUTTING BLADE ADJ	1
10	C400008.17	HANDLE, ENGAGEMENT	2
11	C400074.17	ARM, WHEEL DRIVE ADJ	1
12	C400110.17	PIVOT ASSEMBLY	1
13	C500001	GREASE FITTING, 1/4 x 28	1
14	C500019	SPRING, SMALL HANDLE	2
15	C500025	NUT, 3/8-24	2
16	C500026	YOKE, 3/8 CLEVIS	2
17	C500041	NUT, 3/8-16 LOCK	11
18	C500042	WASHER, 3/8” FLAT	3
19	C500043	BOLT, 3/8-16 X 1	7
20	C500074	BOLT, 5/16-18 X 1-3/4	2
21	C500101	NUT, 5/16-18	6
22	C500115	WASHER, 5/16 LOCK	10
23	C500129	NUT, 3/8-16	6
24	C500130	WASHER, 3/8 LOCK	6
25	C500133	BOLT, 5/16-18 x 1	2
26	C500134	BOLT, 3/8-16 x 1-1/4	2
27	C500137	WASHER, 1/4 LOCK	3
28	C500139	NUT, 1/4-20 LOCK	4
29	C500146	BOLT, 3/8-16 x 1-1/2	2
30	C500154	BOLT, 3/8-16 x 2-1/2	2
31	64123-310	BLT-HEX 1/4-20X2 PLT FLTHR+	2
32	C100001	WASHER, 3/4 NYLON	12
33	C100002	SEAL	12
34	C100003	BEARING	6
35	C100007	GRIP, RUBBER	2
36	C100016.7	BLADE, 18” SOD CUTTER	1
	C100416	16” CUTTING BLADE	1
	C100029	12” CUTTING BLADE	1
	C100110	20” CUTTING BLADE	1
	C100329	24” CUTTING BLADE	1

ITEM	PART NO.	DESCRIPTION	QTY
37	C200004.7	BOLT PITCH ADJUSTMENT	1
38	C200005.7	BOLT, HEIGHT ADJUSTMENT	1
39	C300039.17	PLATE, DEPTH GAUGE	1
40	C400001.7	BAR, HIEGHT ADJUSTMENT	1
41	C400238.17	PITCH ADJUSTMENT BAR	1
42	4172692	knob-plastic	1
43	C500006	WASHER, 1/2 LOCK	6
44	C500007.7	NUT, 1/2 HANDLE	1
45	C500034	WASHER, 1/2 FLAT	10
46	C500088	WASHER, 1/4” FLAT	1
47	C500106	NUT, 1/2-13	4
48	C500131	NUT, 1/2-13 LOCK	2
49	C500241	Bolt, 1/2-13 x 1	2
50	C500151	BOLT, 1/2-13 X 3	2
51	C500152	BOlt, 1/2-13 X 2-3/4	2
52	C600001	STEEL SLEEVE	6
53	C800001.7	ARM, ECCENTRIC	2
54	4172017	S-ARM, BLADE	2
55	C500136	NUT, 1/4-20	4
56	C500296	BOLT, 1/4-20 CRG	1
57	C500068	NUT, 1/4-20 NYLOC	1
58*	4164033	LABEL-CHF VERT	2
59	4175303	BLT-HEX 5/16-24X1 FL THD	6
60	64025-51	NUT-5/16-24	6

*NOT ILLUSTRATED

POWER TRAIN ASSEMBLY

SOD CUTTER

FIGURE 3

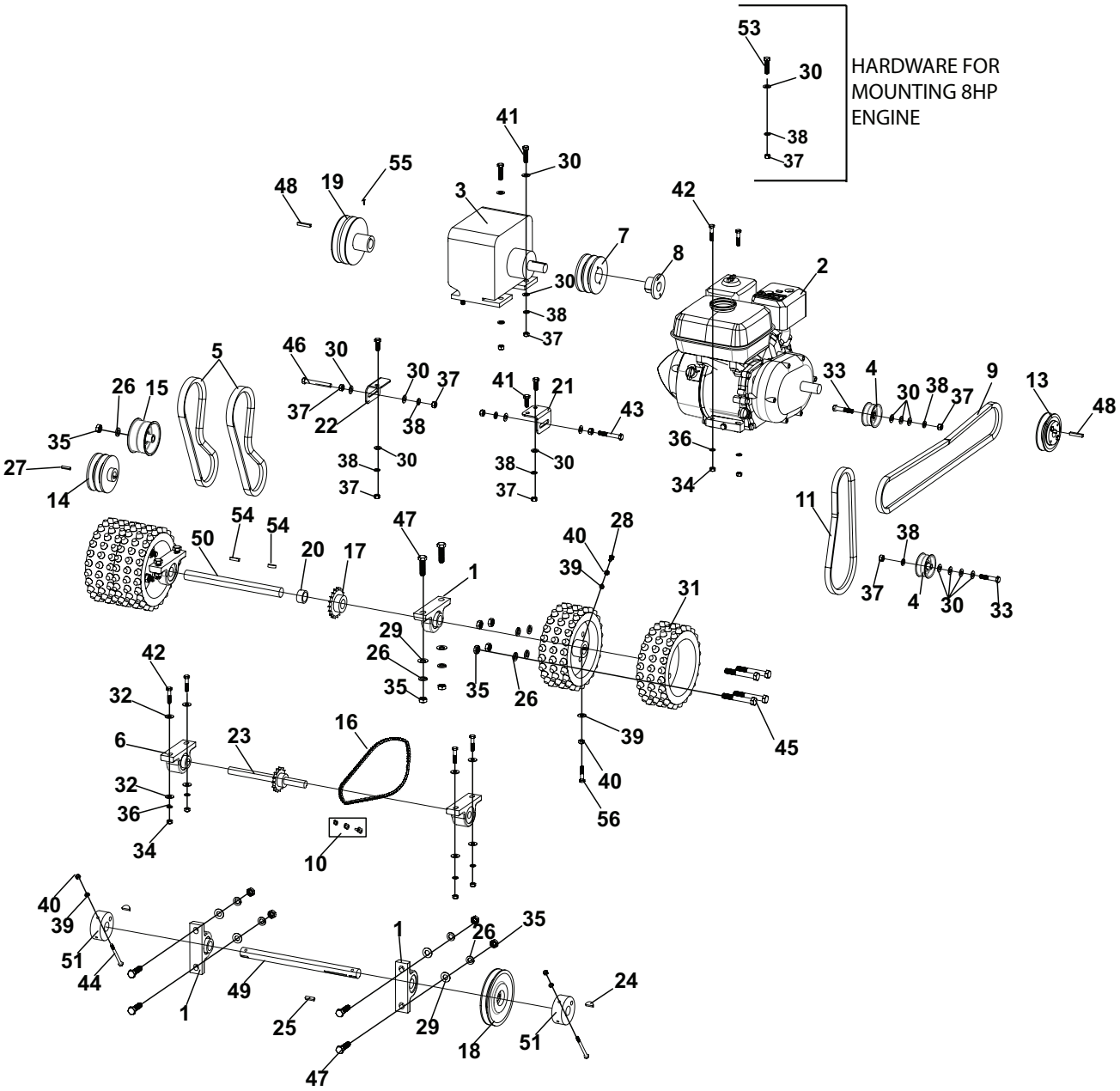

FIGURE 3

ITEM	PART NO.	DESCRIPTION	QTY
1	C100004	BEARING 1” PILLOW BLOCK	4
2	C100005	ENGINE, 5.5 H.P. HONDA	1
	C100114	ENINGE, 8.0 H.P. HONDA	
3	C100008	REDUCTION BOX	1
4	C100010	PULLEY, IDLER	2
5	C100011	V-BELT, BX31 DRIVE	2
6	C100013	BEARING 3/4” PILLOW BLOCK	2
7	C100022	PULLEY, TAPER LOCK	1
8	C100023	HUB, TAPER LOCK	1
9	C100024	V-BELT, B B56 ENGINE 5.5HP	1
	C100113	B59 V-BELT, 8.0HP MODEL	1
10	C100025	LINK, #40 CONNECTING	1
11	C100026	V-BELT 6934 BELT	1
12	C100027	SPRING, THROTTLE	1
13	C100028	PULLEY W/ HUB & BOLTS	1
14	C100207	SHEAVE, DUAL DRIVE DBLE V	1
	C100014	SHEAVE, SINGLE DRIVE (SC-12)	1
15	C100208	PULLEY, DRIVE DBLE IDLER	1
16	C100307	CHAIN, 58 ROLLERS	1
17	C200001	SPROCKET W/HUB, SHAFT	1
18	C200002	PULLEY W/HUB & BOLTS, 6”	1
19	C200031	PULLEY, DUAL DRIVE 5” SPLIT	1
20	C300001	SPACER, DRIVE SHAFT	1
21	C300004.7	CLIP, R.H. BELT ADJUSTMENT	1
22	C300134.7	CLIP, BELT L.H.	1
23	C200039	JACK SHAFT	1
24	C500003	KEY, 1/4 x 7/8 HALF MOON	2
25	C500004	KEY, 1/4 x 1 SQUARE	2
26	C500006	WASHER, 1/2 LOCK	17
27	C500240	KEY, 3/16 X 1 1/2	1
28	C500029	BOLT, 1/4-20 x 3/4	2
29	64163-67	WSHR-.516X1X12GA	8
30	C500042	WASHER, 3/8” FLAT	18
31	4175021	WHEEL, MOLDED	4
32	C500083	WASHER, 5/16 FLAT	8
33	C500091	BOLT, 3/8-16 x 2	2
34	C500101	NUT, 5/16-18	8
35	C500106	NUT, 1/2-13	17
36	C500115	WASHER, 5/16 LOCK	8
37	C500129	NUT, 3/8-16	11
38	C500130	WASHER, 3/8 LOCK	17
39	C500137	WASHER, 1/4 LOCK	6
40	C500136	NUT, 1/4-20	6
41	C500146	BOLT, 3/8-16 x 1-1/2	5
42	C500147	BOLT, 5/16-18 x 1-1/2	8
43	C500154	BOLT, 3/8-16 x 2-1/2	1
44	C500157	BOLT, 1/4-20 x 3-1/2	2
45	C500158	BOLT, 1/2-13 x 3-1/2	8
46	C500159	BOLT, 3/8-16 X3	1
47	C500174	BOLT, 1/2-13 x 1-3/4	8
48	C500181	KEY, 1/4 x 1-1/2 SQUARE	2
49	C600003	SHAFT, ECCENTRIC	1
50	4171051	SHAFT, 12” DRIVE	1
51	C700002	HUB, ECCENTRIC	2
52*	C100244	SWIVEL, WIRE	1
53	C500079	BOLT, 3/8-16 x 1-3/4 (USED ON 8 HP ONLY)	4
54	64164-51	KEY-SQ 1/4 X 1-1/4 ROUNDED	2
55	C500064	SET SCREW, 5/16-18 X 3/8	1
56	64123-114	BLT-HEX 1/4-20 X 1	2

*NOT ILLUSTRATED

OPTIONAL KITS

(NOT SHOWN ON PARTS ILLUSTRATIONS)

KIT P/N	DESCRIPTION	
C100076	ELECTRICAL SHUT-OFF SWITCH & HARDWARE	
C400037	SET OF 2 SIDE BUMPERS & HARDWARE	