CLASSEN®

TRS-20 TURF RAKE

(Serial No. 001000 & UP)

TSS-20 TURF SEEDER

(Serial No. 001000 & UP)

OPERATORS / PARTS MANUAL

802-0011

Schiller Grounds Care, Inc.
1028 Street Road • Southampton, PA 18966
Telephone: 1-800-366-6268

TABLE OF CONTENTS

INTRODUCTION 2
Thank You 2
Read This Manual 2
Warranty.....2
Measurements 2
Serial Numbers.....2
Ordering Parts 2
Directions 2
Pre-Delivery Check List 3
Delivery Check List 3
Owner's Record.....3
SAFETY PRECAUTIONS 4
Training 4
Preparation Safety 4
Engine Safety 4
Operational Safety 4
OPERATION 5
Preparation 5
Starting Engine.....5
Transporting TURF RAKE/ TURF SEEDER.....5
Operating TURF RAKE/ TURF SEEDER 5
OPTIONAL BLADE ASSEMBLIES 6
Changing Blade Assemblies 6
Replacing Shaft Assembly Only 6
Recommended Height Adjustments.....6
GENERAL MAINTENANCE 8
TURF RAKE/ TURF SEEDER Maintenance 8
Engine Maintenance.....8
MACHINE STORAGE 8
Storing TURF RAKE/ TURF SEEDER 8
Operation After Extended Storage 8
CARE FOR HYDRAULIC SYSTEM 9
PARTS MAIN FRAME ASSEMBLY 10
PARTS SELF PROPELLED ASSEMBLY 11
PARTS HANDLE ASSEMBLY 12
SEEDER/MULTIPURPOSE BLADE ASSEMBLY 13
SLICER BLADE ASSEMBLY 13
SEED BOX ASSEMBLY 14
SEEDER TIRE SCRAPE INSTALLATION 15
SEED BOX INSTALLATION 15
SAFETY DECALS 16
NOTES 17
WARRANTY 18

INTRODUCTION

THANK YOU

Thank you for purchasing a CLASSEN TRS-20/ TSS-20.

READ THIS MANUAL

Read this manual carefully in its entirety. It contains assembly, operating, maintenance, adjustment instructions and a parts list for your TRS-20/TSS-20. By following the operating and maintenance instructions you will prolong the life of your equipment and maintain its maximum efficiency. Failure to do so could result in personal injury or equipment damage. This manual should be considered a permanent part of your TRS-20/TSS-20 and should remain with it if you sell it.

WARRANTY

Refer to last page.

MEASUREMENTS

U.S. Units of measure are used in this manual.

SERIAL NUMBERS

Write frame and engine serial numbers, plus model numbers in "Owner's Record" section below. You may need these numbers when you order parts. The serial number sticker plate is located near the left rear corner of the TRS-20/TSS-20 frame.

ORDERING PARTS

When ordering parts, always give the serial number and model of your TRS-20/TSS-20 as well as the quantity, part number and description of the part needed.

DIRECTIONS

"Right Hand" and "Left Hand" sides of the TRS-20/TSS-20 are determined by facing the "back" of the unit as you would operate the machine.

PRE-DELIVERY CHECK LIST

CHECK THE FOLLOWING BEFORE YOU DELIVER THE TRS-20/TSS-20 TO THE CUSTOMER.

1. Guards and shields fastened in place.
2. Decals fastened and legible.
3. Gas lever on engine turned on.
4. All lubrication points greased.
5. Air cleaner.
6. Touch up scratches.
7. Add engine oil (refer to Engine manual)
8. Add fuel, start engine, test run.

DATE SET UP
_____/_____/_____

DELIVERY CHECK LIST

REVIEW THE OPERATORS MANUAL WITH THE CUSTOMER.

1. Classen Mfg., Inc. warranty.
2. Safe operation and service.
3. How to use controls.
4. Operating the machine correctly.
5. Transporting the TRS-20/TSS-20.
6. Correct fuel and lubricants.
7. Daily and periodic inspections.
8. Changing oil after break-in period.
9. Servicing the TRS-20/TSS-20 regularly and correctly.
10. Classen Mfg., Inc. parts and service.
11. Give the customer the Operator's Manual and encourage customer to read it.

DATE DELIVERED
_____/_____/_____

SIGNATURE _____

OWNER'S RECORD

DATE PURCHASED

_____

TRS-20/TSS-20 SEEDER MODEL NUMBER

_____

ENGINE MODEL NUMBER

_____

TRS-20/TSS-20 SERIAL NUMBER

_____

ENGINE SERIAL NUMBER

_____

SAFETY PRECAUTIONS

TRAINING

1. Regard the unit as a piece of power equipment and teach this regard to all who operate this unit.
2. Read the instructions carefully. Be familiar with the controls and the proper use of the equipment.
3. Never allow children, teenagers or people unfamiliar with these instructions to use this piece of equipment.
4. Avoid operating unit while people, especially children or pets, are nearby. Keep in mind that the operator or user is responsible for accidents or hazards occurring to other people or their property.
5. Be sure you know how to stop the TRS-20/TSS-20 at a moment's notice.
6. When using the TRS-20/TSS-20, make certain frame plate is attached at all times when not bagging.

PREPARATION SAFETY

1. The use of personal protective equipment, such as (but not limited to) protection for the eyes, ears, feet and head is recommended.
2. While operating, always wear substantial foot wear and long trousers. Do not operate the equipment when barefoot or wearing open sandals.
3. Area should be free of all obstacles and debris.

ENGINE SAFETY

1. Handle gasoline with care; it is highly flammable.
2. Use an approved gasoline container.
3. Always add fuel before starting the engine.

⚠ WARNING ⚠

DO NOT FILL TANK COMPLETELY FULL.

DO NOT SMOKE WHILE YOU FILL FUEL TANK.

DO NOT REMOVE GAS CAP IF ENGINE IS RUNNING.

DO NOT OPERATE ENGINE IN A CONFINED SPACE WHERE DANGEROUS CARBON MONOXIDE FUMES CAN COLLECT.

4. Fill the fuel tank outdoors.
5. If fuel is spilled, do not attempt to start the engine. Move away from the area of the spill and avoid creating any source of ignition until fuel vapors have dissipated.

OPERATIONAL SAFETY

1. Carefully read and follow all caution stickers.
2. Operate only in daylight or good artificial light.
3. Do not operate machine unless all guards, shields and covers are in place and in proper working condition.
4. It is essential all operator safety mechanisms be connected and in operating condition prior to use.
5. Do not change the engine governor settings or over-speed the engine. Operating an engine at excessive speed may increase the hazard of personal injury.
6. Disengage all blade and drive clutches (release bail) before starting.
7. Start the engine carefully with feet well away from the blades.
8. Do not put hands, feet or clothing near rotating parts while the unit is being operated.
9. Travel up and down slopes at a 45° angle rather than across, to prevent unit from tipping over.
10. Exercise extreme caution when changing direction on slopes. Do not get too close to sharp drop-offs or operate unit on excessively steep slopes.
11. Use caution when backing up or pulling the unit towards you.
12. Stop the blades if unit has to be tilted for transportation, when crossing surfaces (i.e. sidewalks, driveways, stepping stones, etc.) or when transporting the unit to and from the area being worked on.
13. Never pick up or carry a TRS-20/TSS-20 while the engine is running.

14. Stop the engine and disconnect the spark plug wire:
    a) before checking, cleaning or working on unit
    b) after striking a foreign object (inspect the unit for damage and make repairs before restarting and operating)
15. Stop the engine:
    a) whenever you leave the unit
    b) before refueling
    c) before clearing blockages.
16. Reduce the throttle setting during engine run-out and, if the engine is provided with shut-off valve, turn the fuel off at the conclusion of operating.
17. Before shutting off, put drive lever in neutral.

OPERATION

PREPARATION

1. Carefully read this manual and operate TRS-20/TSS-20 correctly.
2. Always check machine on level ground.
3. Visually check all moving parts and all fasteners, if loose or broken, tighten or replace. Check for broken or bent blades, replace if necessary.
4. Lubricate all fittings after every four hours of using machine, using a pressurized gun with standard lithium base lubricant (see "General Maintenance" section). Wipe off fittings before and after lubricating.
5. Add oil to the engine crankcase with engine resting in a level position (refer to engine manufacturer's Owner's Manual for the correct type and amount of oil).
6. Fill the fuel tank according to engine manufacturer specifications.
7. Police lawn area for obstacles and debris (i.e. sprinklers, hoses, toys, etc.)
8. Mark underground sprinkler heads and other hidden obstacles to prevent damage.

STARTING ENGINE

⚠ CAUTION ⚠

TO AVOID INJURY, DO NOT PLACE YOUR FEET OR OTHER BODY PARTS UNDER THE BLADES WHILE STARTING THE ENGINE.

1. Turn fuel cock to the "open" position
2. Turn choke on (closed).
3. Turn ignition switch to "on".
4. Move throttle control to high RPM setting. Do not exceed 3600 rpm.
5. Pull recoil starter rope until engine starts.
6. After engine is warm, turn off choke (open).
7. Allow engine to run one minute before operating.
8. Check engine rpm setting before operating, DO NOT exceed 3600 rpm.

TRANSPORTING THE TRS-20/ TSS-20

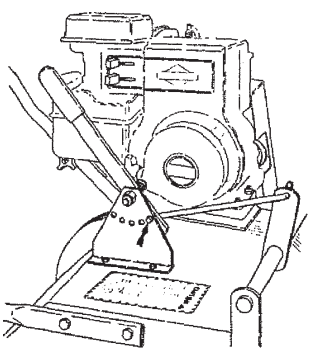

Fig. 1

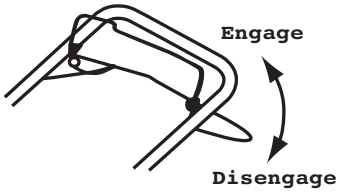

Fig. 2

1. Position height adjustment lever to the start/transport position (see Fig. 1).
2. Start motor , Run motor at one half throttle.
3. Engage top bail.
4. Select speed lever.
5. Bottom bail up for engagement for main shaft

OPERATING THE TRS-20/TSS-20

1. Put speed lever in neutral position
2. Start engine
3. Engage top bail
4. Select forward or reverse with the speed lever.
5. Drive TRS-20/TSS-20 to the area to be raked or seeded.
6. Move height adjustment lever to the appropriate setting for the shaft assembly being used.(see "optional shaft assemblies" section)
7. Lift bottom bail to engage the main shaft. Release bail to stop

OPTIONAL BLADE ASSEMBLIES

CHANGING BLADE ASSEMBLIES

Within minutes your machine can be converted to a turf rake, turf seeder or turf slicer by purchasing the optional blade assemblies available complete with side plates, bearings and drive pulley. Changing the blade assembly can be done quickly as described below.

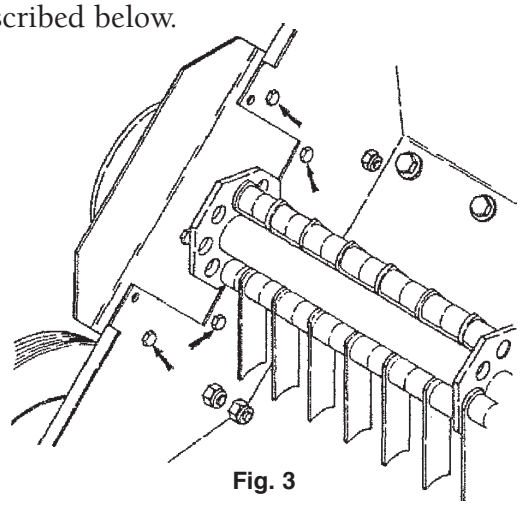

Fig. 3

1. Set unit up on block allowing enough distance beneath machine to change blade assembly.
2. After removing the belt shield, remove the twelve bolts on the left side and three on the right side which hold the blade assembly to the main body (see Fig. 3).
3. Remove the belts from both sides and remove the entire blade assembly. There is no need to loosen any set screws.
4. Next install the optional blade assembly and fasten with six 1/4" x 5/8" bolts on each side. Tighten all bolts on both shields. Center the shaft and tighten the two set screws in each bearing using Pro Lock (nut type, medium strength).
5. When changing back to the original shaft it will not be necessary to loosen any set screws. Only the bolts in the belt shields and the eight bolts holding the shaft will need to be removed.

⚠ CAUTION ⚠

BE CERTAIN THAT THE SET SCREWS ARE TIGHTENED PROPERLY IN BEARINGS AND PULLEY WHEN REASSEMBLING.

REPLACING SHAFT ASSEMBLY ONLY

If replacing the existing shaft assembly, only follow steps 1 through 3 above. Proceed with the following steps.

1. Remove the two drive pulleys and bearing plates from the main shaft (one on each side). Replace with new shaft. Reinstall the bearing plates and drive pulleys on the new shaft using Pro Lock (retaining 1, medium strength) on the shaft and Pro Lock (nut type, medium strength) on the set screws. The pulleys will be positioned on the shaft by bolts, the 1/4" lock washer and the pulley retainer washer.
2. Route the belt behind the idler pulleys and roll the belts onto the lower pulleys then reinstall the belt shields.

⚠ WARNING ⚠

CAUTION: BE CERTAIN THAT THE SET SCREWS ARE TIGHTENED PROPERLY IN BEARINGS AND PULLEY WHEN REASSEMBLING.

RECOMMENDED HEIGHT ADJUSTMENTS

Raking Height

When using the Turf Rake with its raking (flail) blade assembly adjust the raking height as follows.

Normal height is set by placing the Turf Rake on a hard surface making sure one satellite shaft is at dead bottom. Adjust the wheels so the raking fingers on the bottom shaft just touch the ground. DO NOT set the fingers so that they will penetrate the ground as this will counteract the centrifugal force of the fingers and prevent the from raking properly.

With repeated use, raking side of the fingers will begin to wear. To give the fingers a new square raking edge, remove the end plates and turn the entire main shaft assembly 180° and replace it on the Turf Rake. NOTE: Use Pro-Lock (retaining 1, medium strength) on the 7" pulley on the main shaft.

To prolong the life of the main shaft, extra holes are provided. If the circular holes holding the satellite shafts become distorted, rotate all four satellite shafts to the next set of holes.

Seeding/Multipurpose Height

The seeding/multipurpose blades are used for cutting grooves for over-seeding and can also be used for verticutting grasses. To set the height properly place unit on the lawn surface and adjust the wheel height up (see Fig. 4). Adjusting the wheel height up lowers the blades.

Seeding

The proper height setting for over-seeding is approximately 1/4" into the ground. Adjust the wheel height up approximately one notch. If set deeper, grass seed being applied may not germinate.

For best results, over-seed in two passes of 1/2 application rate at right angles or in a criss-cross pattern. Water heavily immediately after seeding then lightly for 10-14 days keeping soil moist.

Slicing

The proper height setting for slicing or aerating is 1/2" to 3/4" into the ground. Adjust the wheel height up one or two notches.

For crawling grasses such as Zoysia, Bermuda, Bahia, etc. raise the wheels only one notch. Crawling grasses should not be sliced too deeply.

For single strand grasses like Bluegrass or Rye, aerate in perpendicular directions for more even slicing. For example, slice in a North-South direction on the first pass, switching to an East-West direction on the second pass.

As the seeder/multipurpose blades wear they may be rotated to provide a new cutting edge. The wheels may be raised to allow the blades to penetrate deeper into the ground.

⚠ CAUTION ⚠

BE CERTAIN THAT THE SET SCREWS ARE TIGHTENED PROPERLY IN BEARINGS AND PULLEY WHEN REASSEMBLING.

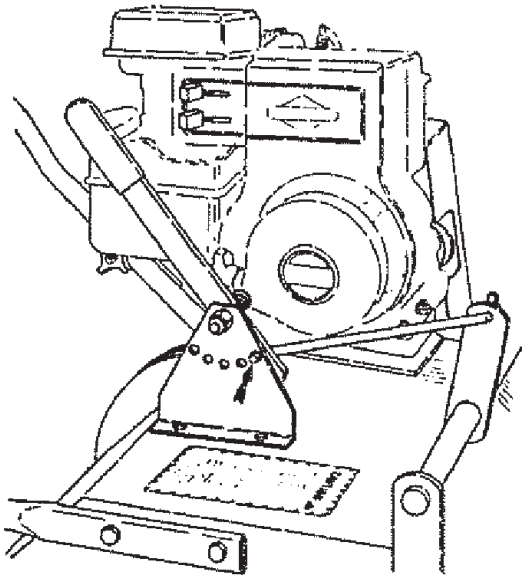

Fig. 4

Slicing Height

The slicer blade assembly is recommended for slicing, verticutting or aerating when a thinner blade is preferred. This is the recommended blade for use on golf course greens. To set the height properly place unit on the lawn surface and adjust the wheel height up (see Fig. 4). Adjusting the wheel height up lowers the blades.

The proper height setting for slicing or aerating is 1/2" to 3/4" into the ground. Adjust the wheel height up one or two notches.

For crawling grasses such as Zoysia, Bermuda, Bahia, etc. raise the wheels only one notch. Crawling grasses should not be sliced too deeply.

For single strand grasses like Bluegrass or Rye, aerate in perpendicular directions for more even slicing. For example, slice in a North-South direction on the first pass, switching to an East-West direction on the second pass.

As the slicer blades wear they may be rotated to provide a new cutting edge. The wheels may be raised to allow the blades to penetrate deeper into the ground.

GENERAL MAINTENANCE

TO KEEP THE TRS-20/TSS-20 IN GOOD OPERATING CONDITION, PERFORM THE FOLLOWING:

- When replacement parts are required, use genuine Classen parts or parts with equivalent characteristics including type, strength, and material. Failure to do so may result in product malfunction and possible injury to the operator and/or bystanders.
- Keep all safety decals legible. Remove all grease, dirt and debris from decals. Any safety decal that becomes illegible should be replaced immediately (see 'Safety Decals" section). Safety decals can be affixed by peeling off the backing and applying to clear, dry surface. Smooth out to remove any air bubbles.
- Do not operate equipment without shields in place.
- Do not make any adjustments or perform any maintenance while the engine is running.
- Check engine mounting bolts frequently to maintain proper tightness.
- Thoroughly clean off blades when application is completed and apply a light coat of oil to prevent rust on blades.
- Keep belt free of oil and dirt.
- Check for worn or deteriorating components that could create a hazard. When new components are installed, be sure that current safety decals are affixed to the replaced components. Safety decals can be affixed by peeling off the backing and applying to clear, dry surface. Smooth out to remove any air bubbles.

ENGINE MAINTENANCE

- Refer to engine manufacturer's Owner's Manual.
- Check engine oil level with engine resting in a level position.
- Inspect air filter element and replace if necessary.
- If carburetor adjustment is necessary, stand to one side and keep feet and hands clear while making adjustments.

MACHINE STORAGE

⚠ SAFETY WARNING ⚠

TO PREVENT POSSIBLE EXPLOSION OR IGNITION OF VAPORIZED FUEL, DO NOT STORE EQUIPMENT WITH FUEL IN TANK OR CARBURETOR OR NEAR OPEN FLAME (I.E. FURNACE, WATER HEATER, PILOT LIGHT).

STORAGE INSTRUCTIONS

Before the TRS-20/TSS-20 is put into storage for any period exceeding 30 days, the following steps should be taken.

1. Drain all fuel from fuel tank and fuel lines.
2. Start engine and run until all fuel is used from carburetor float bowl.
3. While engine is still warm, drain the crankcase oil and replace with the proper weight oil corresponding to the season the TRS-20/TSS-20 will next be used (refer to engine manufacturer's Owner's Manual).
4. Remove the spark plug and squirt a small quantity of engine oil into the cylinder. Turn the engine over a few times to distribute that oil.

OPERATION AFTER EXTENDED STORAGE

To put TRS-20/TSS-20 into operation after an extended storage:

1. Check for loose parts and tighten if necessary.
2. Check for cracked or broken blades and replace,
3. Check that all safety decals are in place and legible.
4. Fill fuel tank.
5. Check engine oil level with engine in level position (refer to engine manufacturer's Owner's Manual).
6. Start engine.
7. Check for fuel leaks.

CARE FOR HYDRAULIC SYSTEM

To keep the hydraulic system in working order, there are a few steps needed to take place. If synthetic oil were used we would suggest a full synthetic oil such as **Mobil 1 15W50, Quaker State Full Synthetic 5W50**, or a similar oil.

Oil viscosity is very important to transmission life. For optimum performance the oil viscosity should maintain a viscosity of 13 cSt [70 SUS]. The minimum oil viscosity to prevent component wear is 9 cSt [55 SUS]. These Viscosity requirements are for an oil temperature of 110 degrees Celsius [230 degrees Fahrenheit] Typically; standard SEA 20W-50 multi-viscosity motor oils will meet this requirement. If the operating temperature is elevated then synthetic oil with greater viscosity index, or more viscosity at elevated temperatures, may be needed to meet viscosity requirements.

System Start-up: (purging air from system). Factory Fills unit with SAE 20W-50 multiviscosity motor oil. This will need to be checked when setting up with instructions below.

At system start-up, several things need to be accomplished to ensure a properly running system.

1. Fill the BDU case and expansion level and ensure they do not empty during the following procedure.
2. Start engine and increase throttle to at least 2/3 speed.
3. Open bypass valve by depressing bypass plunger and holding.
4. Adjust control linkage such that transmission control is stroking full forward.
5. Move and hold control in forward for 3 seconds; repeat two additional times.
6. Close bypass valve be releasing bypass plunger.
7. With engine still at same speed, repeat step 5.
8. Move control to neutral.
9. Check engine speed. Adjust to recommended maximum engine speed.
10. Adjust neutral position.
11. Adjust forward control stop to recommended axle speed.
12. Adjust reverse control stop to recommended axle speed.
13. If axle speed is not achieved ensure linkage allows proper movement of transmission control.
14. If transmission control lever is rotating fully but recommended axle speed is not achieved, repeat start-up procedure.
15. Refill expansion tank oil to recommended level.

PARTS MAIN FRAME ASSEMBLY

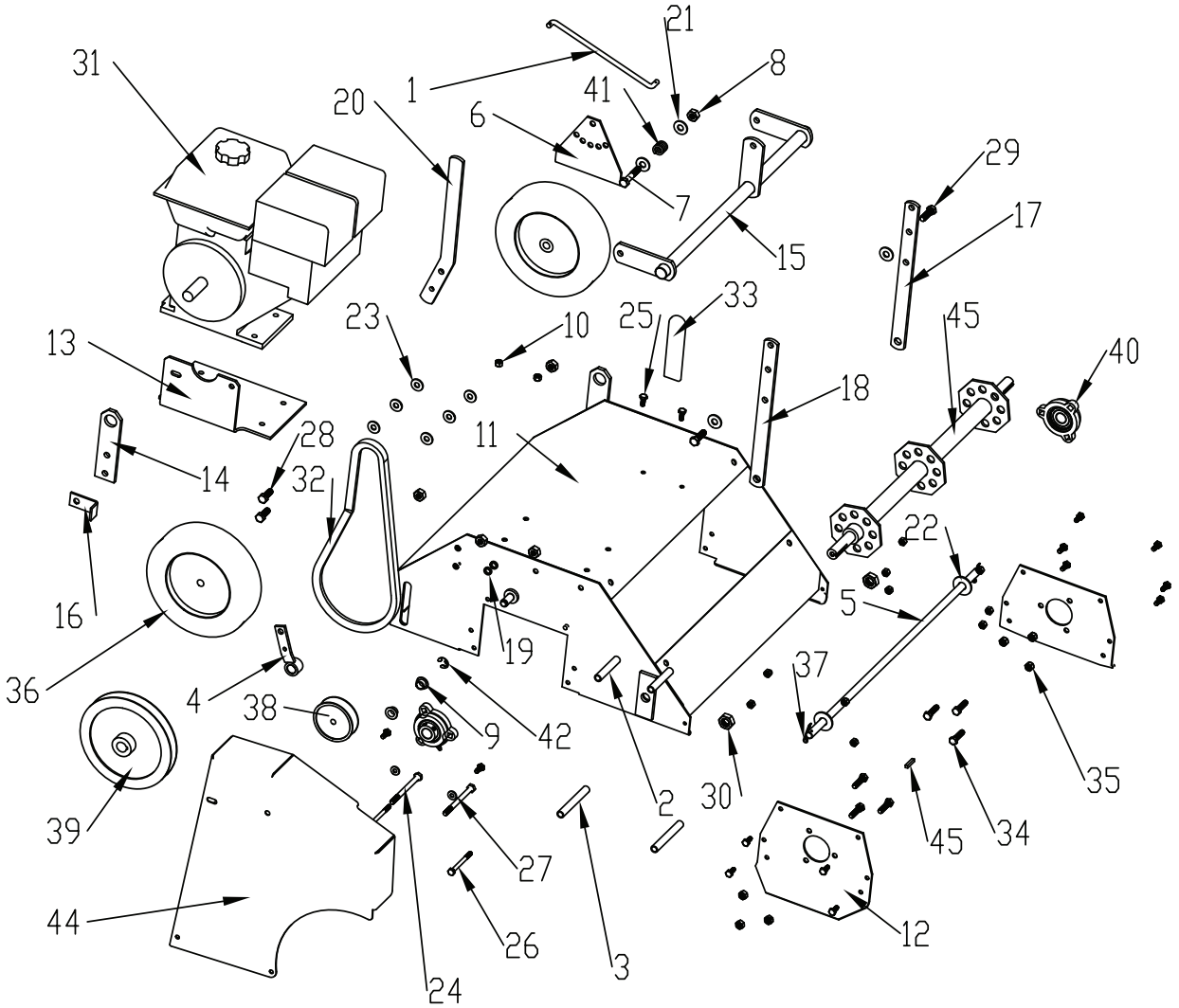

KEY	PART NO	QTY.	DESCRIPTSION	KEY	PART NO	QTY.	DESCRIPTSION
1	C300026	1	ROD-HEIGHT ADJ.	29	C500134	2	3/8-18 x 1-1/4 BOLT
2	C400261	2	TOP BELT GUARD SPACER	30	C500077	2	5/8-18 JAM NUT
3	C400260	2	BOTTOM GUARD SPACER	31	C100137	1	5.5 HP HONDA ENGINE
4	C400035	1	ENGAGEMENT ARM w/STEEL BUSHING	32	C100065	1	RAKE BELT
5	C300027	1	FRONT AXLE	33	C100007	1	RUBBER GRIP
6	C300017	1	HEIGHT ADJUST PLATE	34	C500073	6	5/16-18 x 1-1/4 BOLT
7	C500091	2	3/8-16 x 2 BOLT	35	C500072	6	5/16-18 NYLOC
8	C500076	9	3/8-16 NYLOC	36	C100064	2	8" FRONT WHEEL & TIRE ASSEM
9	C100052	2	BEARING CONTROL	37	C500092	2	HAIR PIN
10	C500068	12	1/4-20 NYLOC	38	C100072	1	FLAT IDLER W/ FLANGES
11	C400031	1	WELDMENT - RAKE BODY	39	C100058	1	7" PULLEY
12	C300013	2	END PLATE	40	C100050	2	FLANGE BEARING
13	C300012	1	ENGINE PAD	41	C500065	1	COMPRESSION SPRING
14	C300018	2	HEIGHT ADJ. MOUNT	42	C500078	1	E RING
15	C400033	1	CRANK ASSEMBLY	44	C400259	1	PULLEY GUARD
16	C300036	1	ENGAGEMENT ARM STOP	45	C500011	1	3/16 SQ. X 1 KEY
17	C300035	1	R.H. SEED BOX SUPPORT	45	C700008	1	RAKE SHAFT
18	C300034	1	L.H. SEED BOX SUPPORT	46	C100340	1	DECAL, TRS-20 (NOT SHOWN)
19	C300030	2	STRUT BUSHING	47	C100341	1	DECAL, TSS-20 (NOT SHOWN)
20	C300142	1	HEIGHT ADJ. LEVER	48	C100069	1	DECAL, DANGER (NOT SHOWN)
21	C500042	4	3/8 FLAT WASHER	49	C100061	1	DECAL, CAUTION (NOT SHOWN)
22	C500034	2	1/2 FLAT WASHER	50	C100070	1	DECAL, DANGER CO2 (NOT SHOWN)
23	C500083	6	5/16 FLAT WASHER	51	C100060	1	DECAL, DANGER MUFFLER (NOT SHOWN)
24	C500243	2	5/16-18 x 4 BOLT	52	C100073	1	LUBRICATION TAG (NOT SHOWN)
25	C500069	14	1/4-20 x 5/8 BOLT	53	C100071	1	DECAL, BAIL ENGAGEMENT (NOT SHOWN)
26	C500244	2	1/4-20 x 4-1/2 BOLT	54	C100074	1	DECAL, CLASSEN (NOT SHOWN)
27	C500088	2	1/4 FLAT WASHER	55	C100342	1	DECAL, SPEED (NOT SHOWN)
28	C500043	4	3/8-16 x 1 BOLT				

PARTS SELF PROPELLED ASSEMBLY

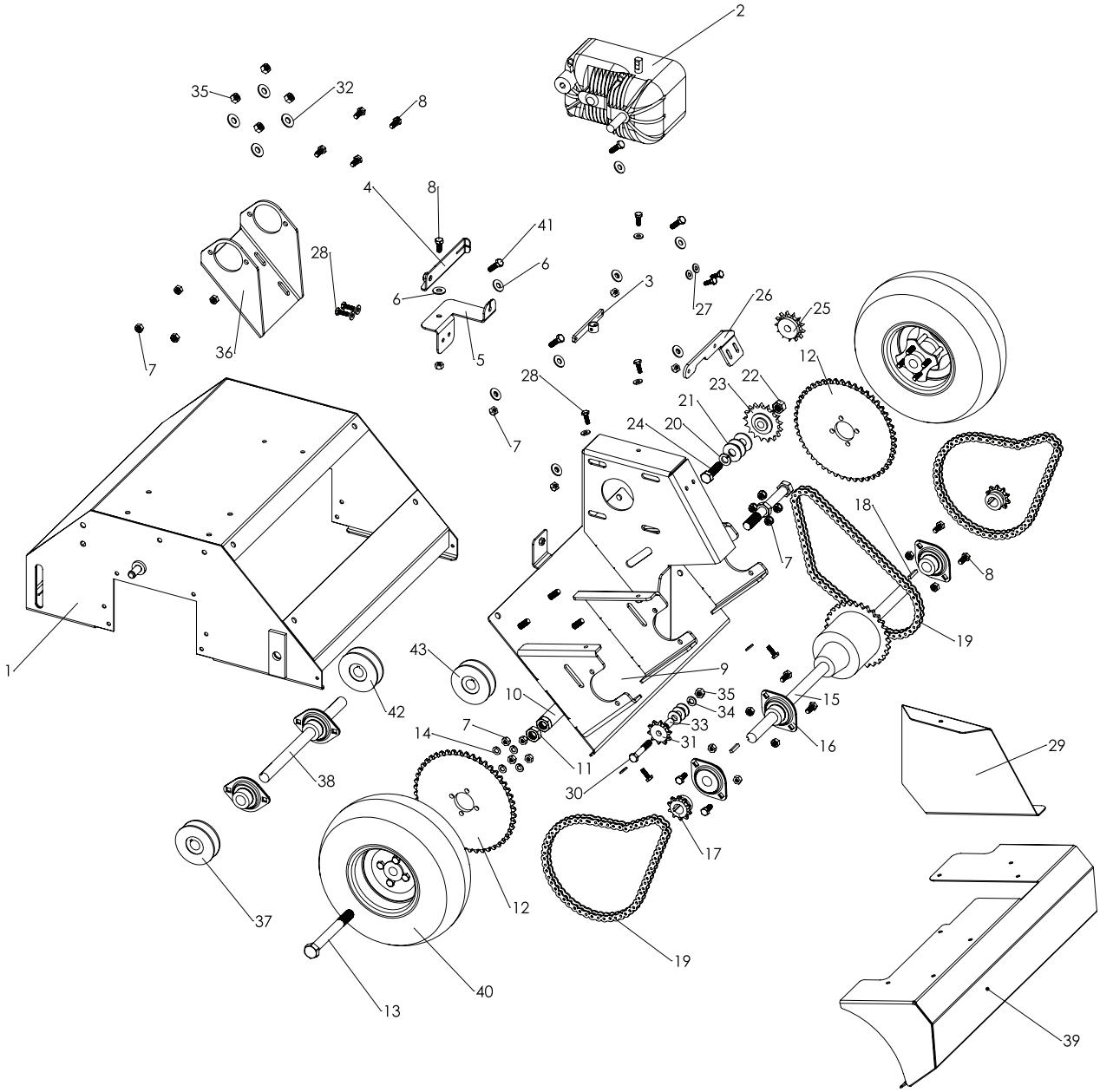

KEY	PART NUMBER	QTY.	DESCRIPTION	KEY	PART NUMBER	QTY.	DESCRIPTION
1	C400031	1	RAKE BODY WLDMT	23	C100043	1	#40x17x1/2 IDLER SPROCKET
2	C100131	1	HYDROSTAT	24	C500174	1	1/2-13 x 1-3/4 BOLT
3	C400265	1	SHIFTER MOUNT	25	C200044	1	13 TOOTH SPROCKET
4	C400264	1	HYDROSTAT TOGGLE	26	C400262	1	CABLE MOUNT
5	C400263	1	NEUTRAL TOGGLE BRACKET	27	C500088	12	1/4 FLAT WASHER
6	C500083	9	5/16 FLAT WASHER	28	C500029	12	1/4-20 x 3/4 BOLT
7	C500101	23	5/16-18 NUT	29	C400266	1	PULLEY GUARD
8	C500140	11	5/16-18 X 3/4 BOLT	30	C500154	2	3/8-16 X 2-1/2 BOLT
9	C400256	1	HYDRO/DIFFERENTIAL MOUNT	31	C200042	2	10 TOOTH IDLER SPROCKET
10	C300141	1	BACK AXLE	32	C500042	10	3/8 FLAT WASHER
11	C500077	2	5/8-18 JAM NUT	33	C300110	2	1/2 x 5/8 SPACER
12	C200041	2	48 TOOTH SPROCKET	34	C500130	2	3/8 LOCK WASHER
13	C500220	2	5/8-16 X 5-1/2 BOLT	35	C500129	6	3/8-16 NUT
14	C500115	12	5/16 LOCK WASHER	36	C400258	1	BRACKET
15	C100322	1	TRANSAXLE W/ SPROCKET	37	C100509	1	BK52H PULLEY
16	C100247	5	3/4 2-BOLT BEARING w/COLLAR	38	C200055	1	HYDRO SHAFT
17	C200043	2	10 TOOTH SPROCKET	39	C400255	1	LARGE GUARD
18	C500011	2	3/16 X 1 SQ. KEY	40	C100316	2	REAR WHEEL
19	C100324	3	CHAIN, 58 ROLLERS	41	C500133	4	5/16-18 X 1 BOLT
20	C500006	1	1/2 LOCK WASHER	42	C100510	1	MA25x3/4" PULLEY
21	C500034	3	1/2 FLAT WASHER	43	C100511	1	AK39H PULLEY
22	C500106	1	1/2-13 NUT				

PARTS HANDLE ASSEMBLY

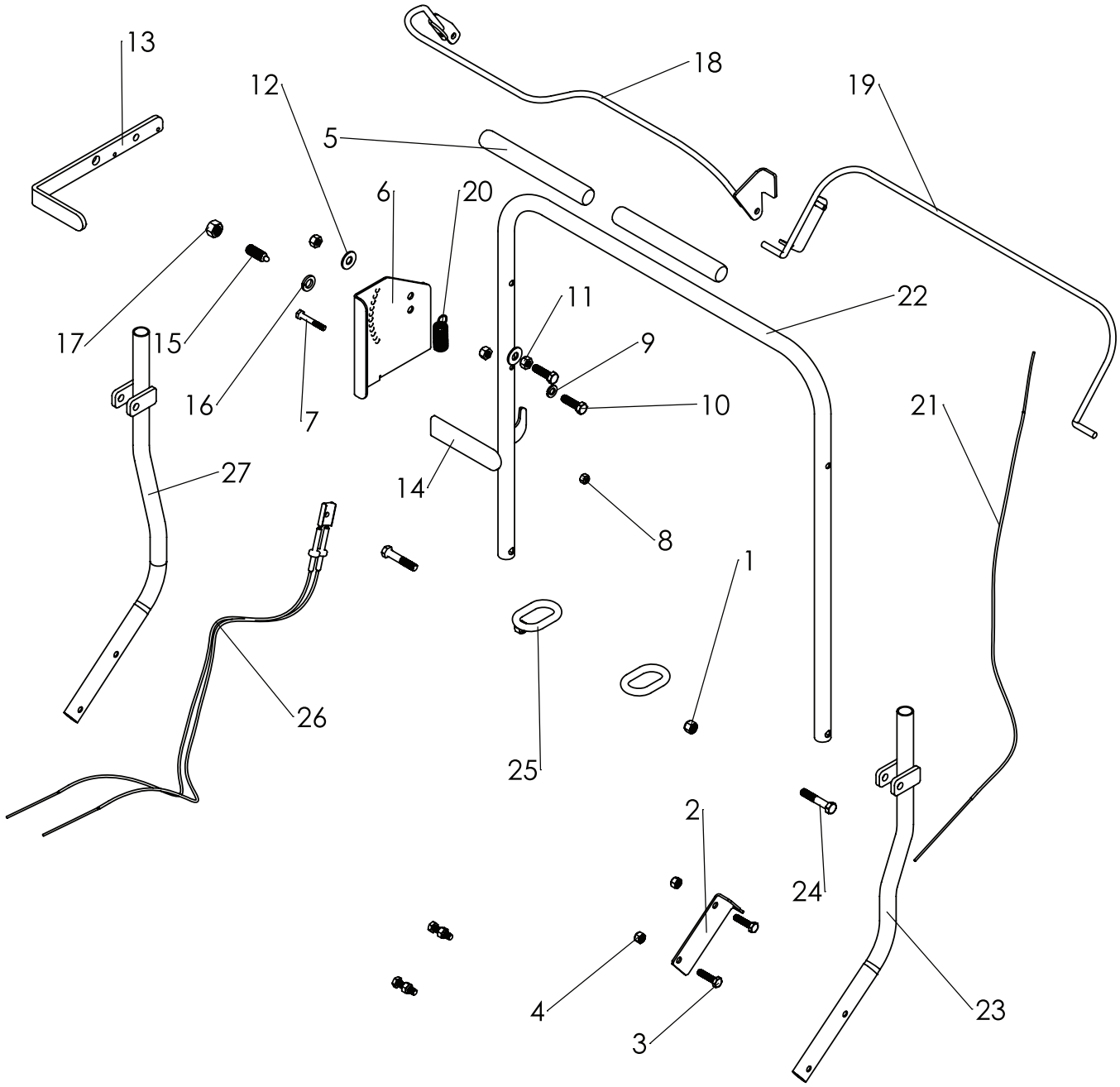

KEY	PART NUMBER	QTY.	DESCRIPTION	KEY	PART NUMBER	QTY.	DESCRIPTION
1	C500167	2	3/8 LOCK NUT	14	C100007	1	RUBBER GRIP
2	C300024	1	BRACKET, CLUTCH CABLE	15	C100326	1	PLUNGER
3	C500073	4	5/16 X 1-1/4 BOLT	16	C500006	1	1/2 LOCK WASHER
4	C500072	4	5/16 NYLOC NUT	17	C500106	1	1/2 NUT
5	C100261	2	HANDLE GRIPS	18	C400254	1	NEUTRAL BAIL
6	C300140	1	SPEED GUAGE LEVER	19	C400034	1	BAIL WLDMT.
7	C500118	1	1/4 X 1-3/4 BOLT	20	C100035	3	SPRING
8	C500068	1	1/4 NYLOC NUT	21	C100053	1	CLUTCH CABLE
9	C500130	1	3/8 LOCK WASHER	22	C300143	1	MAIN HANDLE
10	C500134	2	3/8 X 1-1/4 BOLT	23	C300144	1	LOWER HANDLE, L.H.
11	C500129	4	3/8 NUT	24	C500091	2	3/8-16 X 2 BOLT
12	C500042	2	3/8 FLAT WASHER	25	C100251	2	HANDLE LOCK RING
13	C300139	1	SPEED LEVER	26	C100327	2	SHIFTER CABLE
				27	C300145	1	LOWER HANDLE, R.H.

SEEDER/MULTIPURPOSE BLADE ASSEMBLY

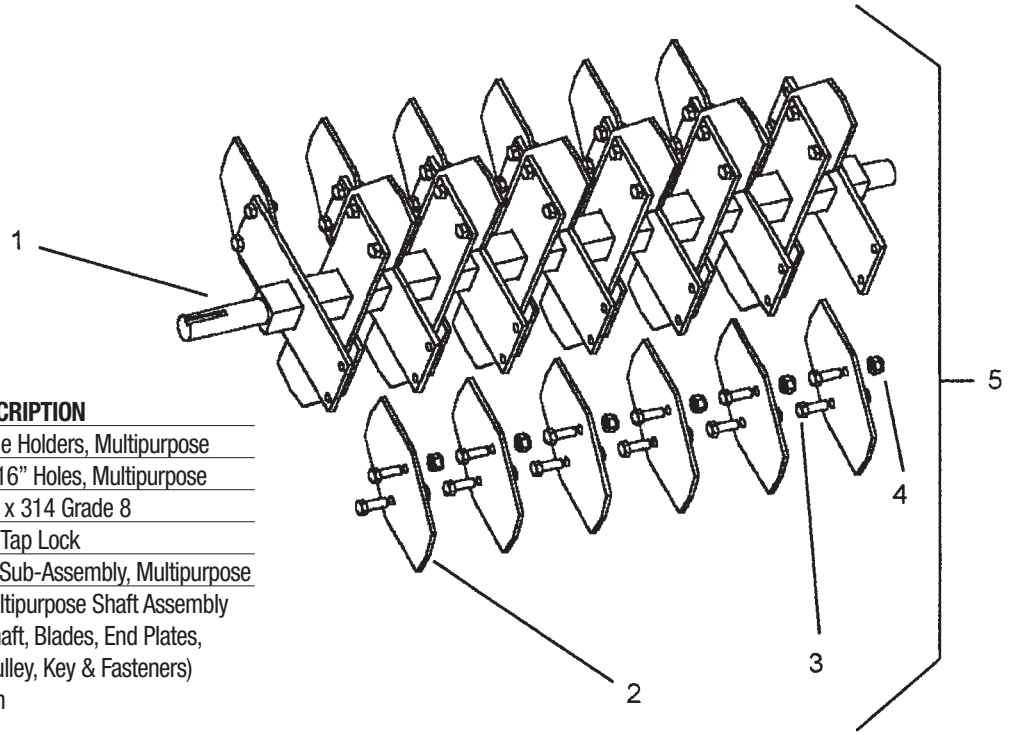

KEY	PART NO.	QTY/PER MACHINE	DESCRIPTION
1	700025	1	Shaft w/ Blade Holders, Multipurpose
2	100310	26	Blade w/ 15/16" Holes, Multipurpose
3	500216	52	Bolt, 5/16-18 x 314 Grade 8
4	500217	52	Nut, 5/16-18 Tap Lock
5	600030	1	Shaft/Blades Sub-Assembly, Multipurpose
6	900026	1	Complete Multipurpose Shaft Assembly (Includes Shaft, Blades, End Plates, Bearings, Pulley, Key & Fasteners) - Not Shown

SLICER BLADE ASSEMBLY (OPTIONAL)

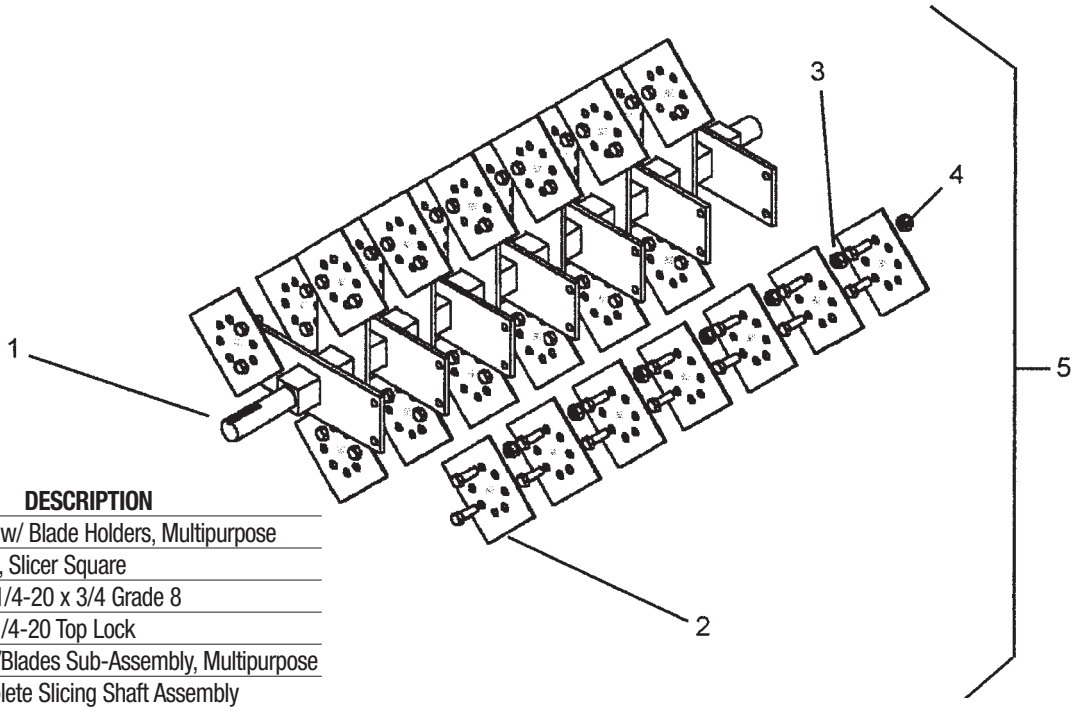

KEY	PART NO.	QTY/PER MACHINE	DESCRIPTION
1	700025	1	Shaft w/ Blade Holders, Multipurpose
2	300032	26	Blade, Slicer Square
3	500180	52	Bolt, 1/4-20 x 3/4 Grade 8
4	500160	52	Nut, 1/4-20 Top Lock
5	600024	1	Shaft/Blades Sub-Assembly, Multipurpose
6	900016	1	Complete Slicing Shaft Assembly (Includes Shaft, Blades, End Plates, Bearings, Pulley, Key & Fasteners) - Not Shown

TSS-20 SEED BOX ASSEMBLY

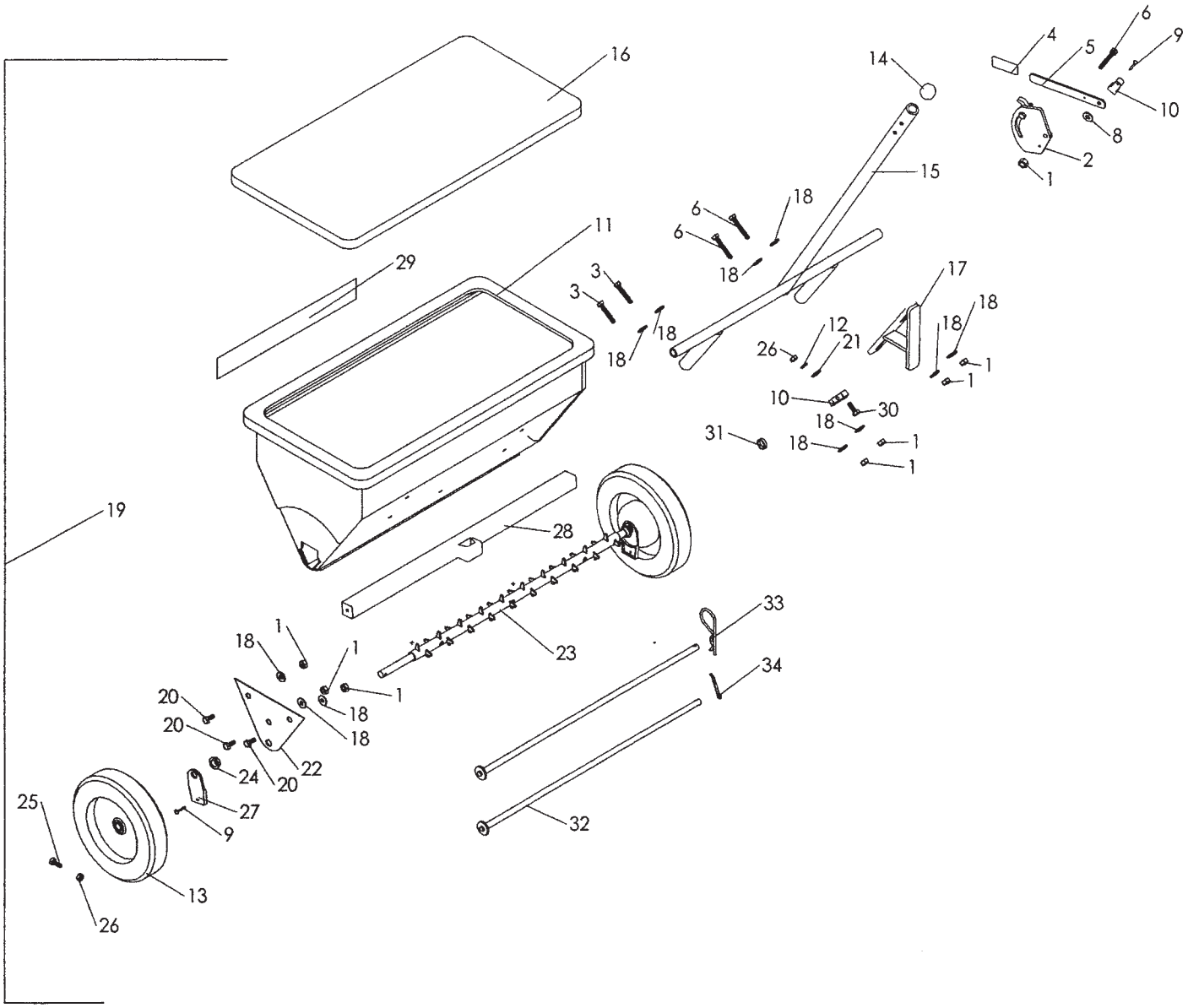

KEY	PART NO.	QTY/PER MACHINE	DESCRIPTION
1	500068	8	1/4” NYLOC NUT
2	100140	1	GAUGE w/ BOLT & WING NUT
3	500089	2	1/4” x 1-1/2” BOLT
4	100142	1	CONTROL LEVER GRIP
5	100141	1	CABLE CONTROL LEVER
6	500118	3	1/4” x 1-3/4” BOLT
7	100139	1	CONTROL CABLE (NOT SHOWN)
8	100127	1	FRICTION WASHER
9	100229	3	#8 x 3/4” BLACK SCREW
10	100144	2	HOUSING CLIP
11	100357	1	SEED BOX
12	500226	1	3/16 LOCK WASHER
13	100355	2	8” SEED BOX DRIVE WHEEL
14	100067	2	SHAFT GUARD
15	400038	1	MOUNTING BRACKET
16	100078	1	VINYL SEED BOX COVER
17	400039	1	STABILIZING BRACKET

KEY	PART NO.	QTY/PER MACHINE	DESCRIPTION
18	500088	10	1/4” FLAT WASHER
19	900033	1	COMPLETE SEED BOX ASSEMBLY
20	500069	3	1/4” x 5/8” BOLT
21	500227	1	3/16” FLAT WASHER
22	300116	1	SIDE PLATE
23	400209	1	AXLE
24	100356	2	BEARING
25	500223	2	3/16 x 1” BOLT
26	500224	3	3/16” NUT
27	100358	2	SHUT-OFF END CLIP
28	100359	1	SHUT-OFF ASSEMBLY
29	100074	1	DECAL, “CLASSEN”
30	500225	1	3/16” x 3/4” BOLT
31	100020	1	PLASTIC TIE
32	400040	2	CONNECTING PINS
33	500096	1	5/32” x 3” HAIR PIN
34	500016	1	5/32” x 1-1/4” COTTER PIN

SEEDER TIRE SCRAPE INSTALLATION

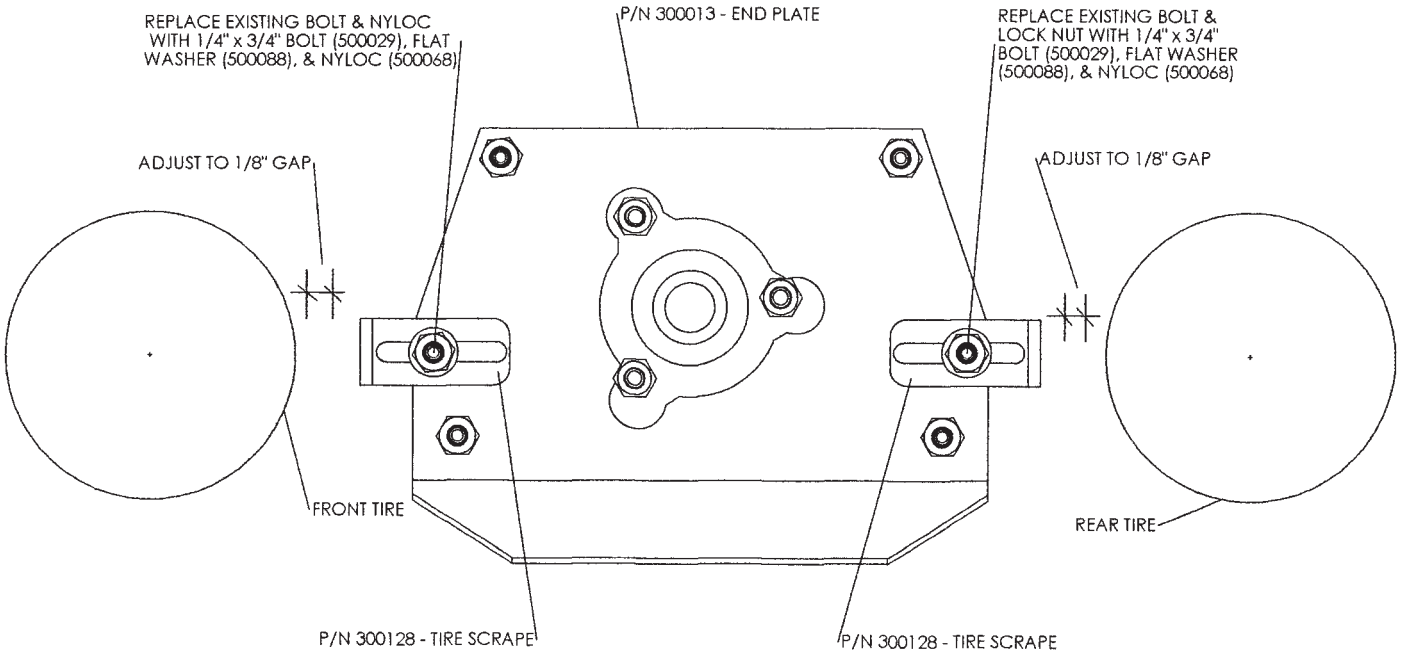

SEED BOX INSTALLATION

For shipping purposes only, the seed box assembly is attached to machine improperly.

To set your machine correctly for operation, remove hairpin clip (A) from upper connecting rod (B). Slide upper rod out, allowing "A shaped" stabilizing bracket (C) on seed box to sit over lower connecting rod. (When mounted properly, wheels of seed box should be resting on front wheels of machine.) Reinsert rod and clip.

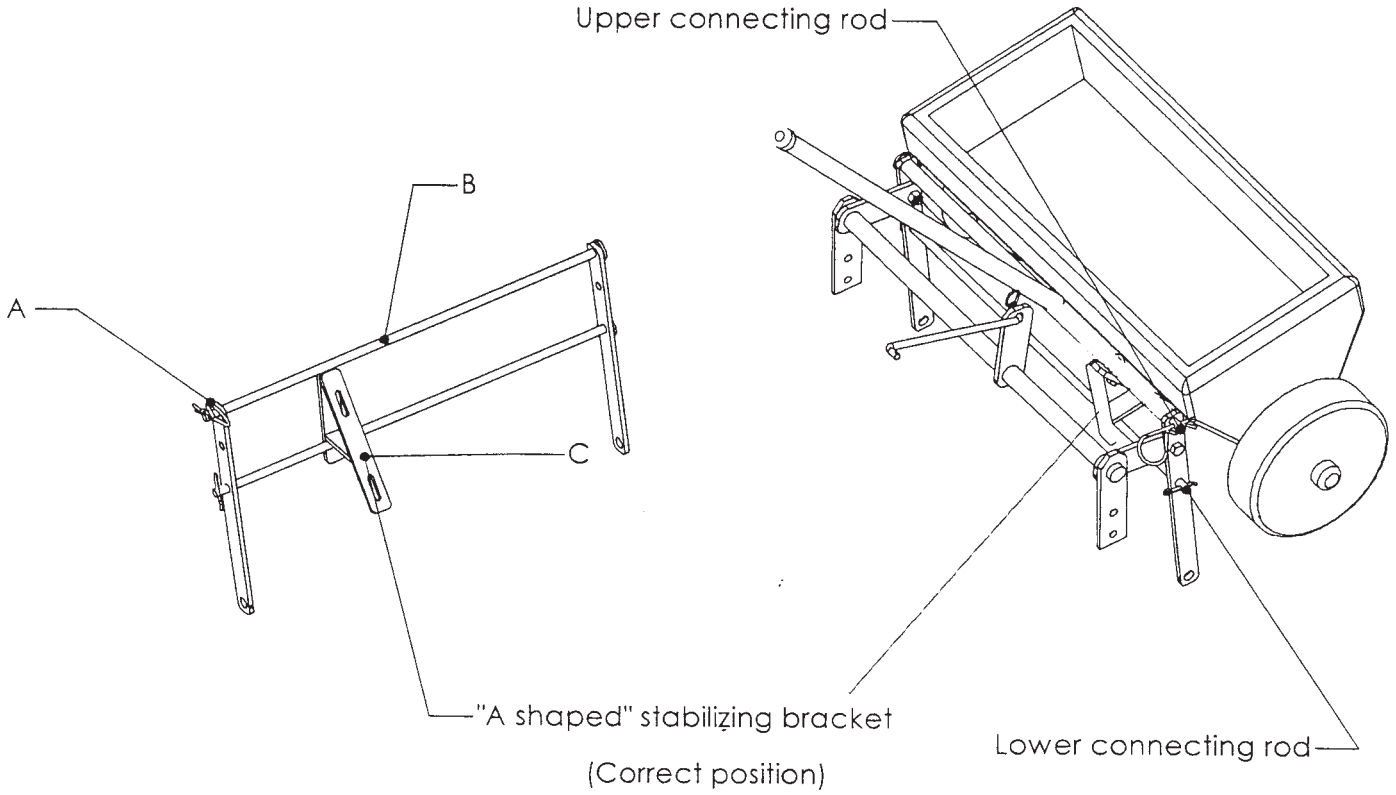

SAFETY DECALS

1

2

5

3

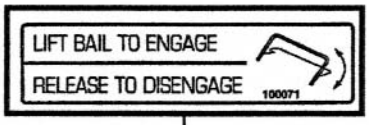

4

6

7

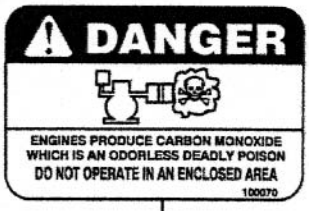

8

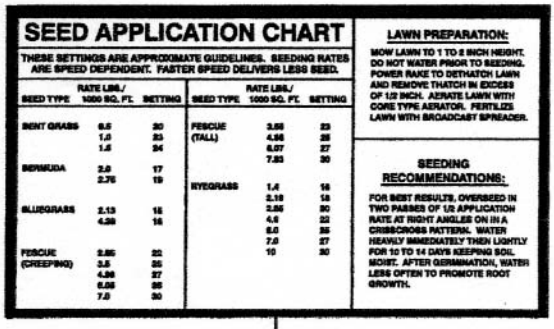

9

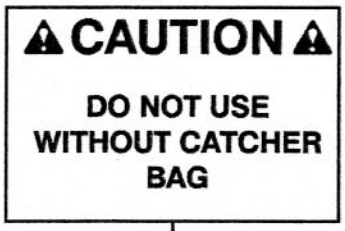

10

KEY	PART NO.	QTY/PER MACHINE	DESCRIPTION
1	100074	2	Decal, “Classen”
2	100060	1	Decal, “CAUTION - Muffler and Shields May Exceed 150°”
3	100340	1	Decal, “TRS-20” (Turf Rake only)
4	100071	1	Decal, “Bail Engagement”
5	100061	1	Decal, “CAUTION - Operating Instructions”

KEY	PART NO.	QTY/PER MACHINE	DESCRIPTION
6	100341	1	Decal, “TSS-20” (Turf Seeder only)
7	100069	1	Decal, “DANGER, Keep Hands and Feet Away”
8	100070	1	Decal, “DANGER - Carbon Monoxide”
9	100138	1	Decal, “Seed Application Chart” (Turf Seeder only)
10	100228	1	Decal, “CAUTION - Catcher Bag (Turf Rake only)
11	100054	1	Manual, Operators/Parts (Not Shown)

NOTES