HYDRO OVERSEEDER

MODELS:

HTS-20HD

Hydro Overseeder Honda GX270

OPERATOR'S, PARTS, & SAFETY MANUAL

SCHILLER GROUNDS CARE

MAN 4176449
Rev B
Original Language Instructions

CALIFORNIA

Proposition 65 Warning

Diesel engine exhaust and some of its constituents are known to the State of California to cause cancer, birth defects and other reproductive harm.

⚠ WARNING

The engine exhaust from this product contains chemicals known to the State of California to cause cancer, birth defects or other reproductive harm.

CALIFORNIA

Proposition 65 Warning

Battery posts, terminals, wiring insulation, and related accessories contain lead and lead compounds, chemicals known to the State of California to cause cancer and birth defects or other reproductive harm. **WASH HANDS AFTER HANDLING.**

IMPORTANT MESSAGE

Thank you for purchasing this Classen product. You have purchased a world class product, one of the best designed and built anywhere.

This machine comes with an Operation and Safety Manual, Parts and Service Manual, and Engine Manual. The useful life and good service you receive from this machine depends to a large extent on how well you read and understand these manuals. Treat your machine properly, lubricate and adjust it as instructed, and it will give you many years of reliable service.

Your safe use of this Classen product is one of our prime design objectives. Many safety features are built in, but we also rely on your good sense and care to achieve accident-free operation. For best protection, study the manuals thoroughly. Learn the proper operation of all controls. Observe all safety precautions. Follow all instructions and warnings completely. Do not remove or defeat any safety features. Make sure those who operate this machine are as well informed and careful in its use as you are.

See a Classen dealer for any service or parts needed. Classen service ensures that you continue to receive the best results possible from Classen products. You can trust Classen replacement parts because they are manufactured with the same high precision and quality as the original parts.

Classen designs and builds its equipment to serve many years in a safe and productive manner. For longest life, use this machine only as directed in the manuals, keep it in good repair and follow safety warnings and instructions. You'll always be glad you did.

Classen
Schiller Grounds Care, Inc.
1028 Street Road
Southampton, PA 18966-4217

TABLE OF CONTENTS **FIGURES** **PAGE**

SAFETY....4-10
SPECIFICATIONS....11
LABELS....12, 13
SET-UP INSTRUCTIONS....14
CONTROLS....15, 16
OPERATION....17, 18
MAINTENANCE/ STORAGE....19-23
TROUBLESHOOTING....24
PARTS SECTION....25
HANDLE ASSEMBLY....26, 27
DRIVE ASSEMBLY....28, 29
REEL ASSEMBLY....30, 31
HOPPER ASSEMBLY....32, 33
ASSEMBLY LABELS....34, 35
WARRANTY....BACK COVER

This Operator, Parts and Safety Manual is part of the machine. Suppliers of both new and second-hand machines must make sure that this manual is provided with the machine THESE INSTRUCTIONS ARE FOR YOUR SAFEY. PLEASE READ THROUGH THEM THOROUGHLY BEFORE USE AND RETAIN THEM FOR FUTURE REFERENCE.

NOTICE !!!

Unauthorized modifications may present **extreme** safety hazards to operators and bystanders and could also result in product damage.

Schiller Grounds Care, Inc. strongly warns against, rejects and disclaims any modifications, add-on accessories or product alterations that are not designed, developed, tested and approved by Schiller Grounds Care, Inc. Engineering Department. Any Schiller Grounds Care, Inc. product that is altered, modified or changed in any manner not specifically authorized after original manufacture-including the addition of "after-market" accessories or component parts not specifically approved by Schiller Grounds Care, Inc. will result in the Schiller Grounds Care, Inc. Warranty being voided.

Any and all liability for personal injury and/or property damage caused by any unauthorized modifications, add-on accessories or products not approved by Schiller Grounds Care, Inc. will be considered the responsibility of the individual(s) or company designing and/or making such changes. Schiller Grounds Care, Inc. will vigorously pursue full indemnification and costs from any party responsible for such unauthorized post-manufacture modifications and/or accessories should personal injury and/or property damage result.

This symbol means:
ATTENTION!
BECOME ALERT!

Your safety and the safety of others is involved.

Signal word definitions:

The signal words below are used to identify levels of hazard seriousness. These words appear in this manual and on the safety labels attached to Schiller Grounds Care, Inc. machines. For your safety and the safety of others, read and follow the information given with these signal words and/or the symbol shown above.

⚠DANGER

DANGER indicates an imminently hazardous situation which, if not avoided, **WILL** result in death or serious injury.

⚠WARNING

WARNING indicates a potentially hazardous situation which, if not avoided, **COULD** result in death or serious injury.

⚠CAUTION

CAUTION indicates a potentially hazardous situation which, if not avoided, **MAY** result in minor or moderate injury. It may also be used to alert against unsafe practices or property damage.

CAUTION

CAUTION used without the safety alert symbol indicates a potentially hazardous situation which, if not avoided, **MAY** result in property damage.

Schiller Grounds Care, Inc.

1028 Street Road
Southampton, PA 18966 U.S.A
Phone: 215-357-5110
Fax: 215-357-8045

MODEL NUMBER

SERIAL NUMBER

MODEL NUMBER: This number appears on sales literature, technical manuals and price lists and serial tag.

SERIAL NUMBER: This number appears only on your unit. It contains the model number followed consecutively by the serial number. Use this number when ordering parts or seeking warranty information.

⚠ WARNING

If the seeder is used improperly or safety precautions are not followed, the users risk serious injury to themselves, others and property. Read and understand this manual before attempting to operate this seeder.

⚠ CAUTION

Slicing blades will continue to run for several seconds after turning off the seeder. Wait until the blades have completely stopped before lifting the seeder or conducting inspection and maintenance.

⚠ WARNING

Some dust and debris created by the use of the tool could contain chemicals know to the State of California to cause cancer and birth defects or other reproductive harm. Some examples of these chemicals are:

- **Chemicals in fertilizers**
- **Compounds in insecticides, herbicides and pesticides.**
- **Arsenic and chromium from chemically treated lumber**

Your risk from exposure to these chemicals varies, and depends on how often you do this type of work. To reduce your exposure, work in a well ventilated area and with approved safety equipment, such as dust masks that are specifically designed to filter out microscopic particles.

⚠ WARNING

In some countries regulations define at what time of the day and on what special days products are allowed to be used and what restrictions apply! Ask your local agencies for all detailed information and observe regulations!.

⚠ WARNING

Adopt proper measures to protect yourself against vibration exposures. Take the whole work process including times the seeder is running under no load or switched off into consideration. Proper measures include among others, regular maintenance and care of product and accessories, keeping hands warm, periodic breaks and proper planning of work processes.

SAFETY DECAL INFORMATION: On the product, the rating label, and within these instructions you will find among others the following symbols and abbreviations. Familiarize yourself with them to reduce hazards like personal injuries and damage to property.

Caution / Warning.

Read the instruction manual.

Wear eye protection.

Wear hearing protection.

Wear protective gloves.

Wear a dust mask.

Wear protective, slip-resistant footwear.

Pay special attention when working on the cutting device! Pay special attention when working on or near the slicing blades!

OPERATOR PREPARATION & TRAINING

READ THE OPERATION & SAFETY MANUAL

⚠ WARNING

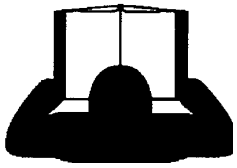

- If an operator or mechanic cannot read English, it is the owner's responsibility to explain this material to them. If any portion of this material is unclear, contact your factory representative for clarification.
- Become familiar with the safe operation of the equipment, operator controls and safety signs. Be prepared to stop the engine quickly in an emergency. Do not operate or allow another person to operate this machine if there are any questions about safety.
- All operators and mechanics should be trained. The owner is responsible for training the users.
- Dress properly. Always wear proper non-slip footwear and long trousers while working. Do not operate when barefoot or wearing open sandals. Do not wear loose clothing or jewelry as such articles can become caught in moving parts. Wear a protective covering to contain long hair. Wearing protective gloves is recommended when working outdoors. Use safety glasses and hearing protection.
- Wear appropriate hearing protection.
- Never allow children, unskilled or improperly trained people to operate this equipment. Local regulations can restrict the age of the operator.
- Do not put hands or feet near or under rotating parts.
- Never pick up or carry the unit while the engine is running.
- Keep warning labels and this operator's manual legible and intact. Replacement labels and manuals are available from the factory.
- Do not operate machine while under the influence of drugs or alcohol, or any other condition of impairment.
- The owner/user can prevent and is responsible for accidents or injuries occurring to themselves, other people, or property.

⚠ WARNING

SITE PREPARATION & CIRCUMSTANCES

- Evaluate the terrain to determine how to safely perform the job. Only use accessories and attachments approved by the manufacturer.
- Clear the area of objects such as rocks, toys, wire or any other debris that may be thrown or get tangled in the seeder.
- Be sure the area is clear of pets and people, especially young children. Never assume they will remain where you last saw them. Stop the machine if any enter the area.
- Keep work area clean and well lit. Cluttered, dark areas invite accidents. Work only in daylight or in good artificial light.
- Keep in mind that the operator or user is responsible for accidents or hazards occurring to other people or their property.
- Exercise extreme caution when changing direction on slopes.
- Avoid dangerous environments. Do not use the seeder in rain or in damp or wet locations. Do not operate the seeder in gaseous or explosive atmospheres or use the seeder new flammable or combustible liquids. Engines in these type of tools normally spark, and the sparks might ignite fumes.
- Be aware that the seeder may unexpectedly bounce upward or jump forward if the blades should strike buried obstacles such as large stones, roots, or stumps.

MACHINE PREPARATION **WARNING**

- Read engine manual.
- Do not tamper with or defeat safety devices. Keep guards, shields and interlock safety devices in place and in proper working condition. They are for your protection.
- Keep all fasteners such as nuts, bolts, and pins well secured.
- Check for damaged parts – Before further use of the seeder, a guard or other part that is damaged should be carefully checked to determine that it will operate properly and perform its intended function. Check for alignment of moving parts, binding of moving parts, breakage of parts, mounting, and any other condition that may affect its operation. A guard or other part that is damaged should be properly repaired or replaced.
- Verify that machine and attachments, if any, are in good operating condition.
- Do not engage seeder until ready to use.
- The engine housing and exhaust remain hot for a short period after the seeder is turned OFF. Allow the engine and exhaust to cool completely before touching or storing near combustible material.

OPERATING SAFELY IN GENERAL **WARNING**

- Use extra care when loading or unloading the machine into a trailer or truck.
- Never operate without guards, plates, or other safety protective devices in place.
- Do not run the engine in an enclosed area where dangerous carbon monoxide fumes can collect.
- Never leave a machine unattended. Turn off seeder and stop engine before leaving the machine.
- Use extreme caution when reversing or pulling machine towards you.
- Stop operation if someone approaches.

STARTING **WARNING**

- Start according to instructions in this manual or on the machine.
- Before attempting to start the engine, make sure the seeder is disengaged.
- When starting the engine, make sure hands and feet are clear of the seeder.
- Do not engage seeder at full throttle. Set throttle to idle or lowest possible engine speed.
- Do not change engine governor settings or overspeed the engine. Operating the engine at excessive speed can increase the hazard of personal injury.

OPERATING ON SLOPES **WARNING**

- Use extra care when working on slopes
- Do not operate on slopes if uneasy or uncertain. Ultimate responsibility for safe operation on slopes rests with the operator.
- Do not operate on steep slopes.
- Keep all movement on slopes slow and gradual.
- Do not seed near drop-offs, ditches or embankments. The machine could suddenly turn over if a wheel runs over the edge or an edge caves in.
- Do not turn on slopes unless necessary, and then turn slowly and downhill when possible.
- Be sure of your footing on slopes.

INTERRUPTING OPERATION **WARNING**

Before leaving the operator's position, shut off engine.

- Stop the engine, disengage the blade, set parking brake and wait until the blade stops rotating:
  - before refueling.
  - before making depth adjustment unless the adjustment can be made from the operator's position.

- Stop the engine, disengage the seeder, set parking brake, and wait until the blade stops rotating and disconnect the spark plug wire:
  - before clearing blockages or unclogging;
  - before checking, cleaning or working on the machine;
  - after striking a foreign object. Inspect the machine for damage and have repairs made as needed before restarting;
  - if the machine begins to vibrate abnormally: shut off machine immediately. Inspect and have repairs made as needed before restarting;
  - except for repairs or adjustments as specifically noted, such as for carburetor adjustment, where the engine must be running. Keep hands and feet clear of moving parts in these circumstances.

- Allow the seeder to come to a complete stop when stopping operation to clear blockages, unclog, inspect the machine, do maintenance or repair.

- Reduce the throttle setting during engine shutdown and, if the engine is provided with a shutoff valve, turn the fuel off at the conclusion of operation.

MAINTENANCE SAFETY **WARNING**

Maintain machine according to manufacturer's schedule and instructions for maximum safety and best results.

- Park machine on level ground.

- Never allow untrained personnel to service machine.

- Guards should only be removed by a qualified technician for maintenance or service. Replace when work is completed.

- Adjust or repair only after the engine has been stopped and the seeder has stopped moving.

- Disconnect spark plug wire(s) before doing any maintenance.

- Replace parts if worn, damaged or faulty. For best results, always replace with parts recommended by the manufacturer.

- Do not dismantle the machine without releasing or restraining forces which may cause parts to move suddenly.

- Provide adequate support, e.g. jack stands for lifted machine or parts if working beneath.

- Do not put hands or feet near or under rotating parts.

- Clean up spilled oil or fuel thoroughly.

- Replace faulty mufflers.

- To reduce fire hazards, keep the engine, muffler, and fuel storage area free of grass, leaves, debris buildup or grease.

- Never attempt to make adjustments while the engine is running except for repairs or adjustments as specifically noted, such as for carburetor adjustment, where the engine must be running. Keep hands and feet clear of moving parts in these circumstances.

STORAGE SAFETY

⚠ WARNING

- Stop the engine and allow to cool before storing.
- Drain the fuel tank outdoors only.
- Store fuel in an approved container in a cool, dry place.
- Keep the machine and fuel containers in a locked storage place to prevent tampering and to keep children from playing with them.
- Do not store the fuel container or equipment with gasoline in the tank inside a building where fumes may reach an open flame or spark.
- Appliances such as furnaces and water heaters with a pilot light have an open flame.
- Keep gasoline storage area free of grass, leaves and excessive grease to reduce fire hazard.
- Clean debris from cutting units, drives, mufflers and engine to help prevent fires.
- Clean up any spilled gasoline or oil in the storage area.
-
- Store the seeder in a sheltered, dry, frost free, well-ventilated place.
-
- When not in use, the seeder should be stored indoors in a locked-up place out of the reach of children.

BLADES

⚠ WARNING

- Blades are sharp and can cut. Use extra caution when handling. Wear appropriate personal protective equipment.
- Only replace blades. Never straighten or weld them.
- Keep other persons away from blades.

FUEL SAFETY

⚠ WARNING

- Gasoline is flammable; gasoline vapors are explosive. Use extra care when handling.
- Store only in containers specifically designed for fuel.
- When refueling or checking fuel level:
  - Stop the engine and allow to cool;
  - Do not smoke;
  - Refuel outdoors only;
  - Use a funnel;
  - Do not overfill;
  - If fuel is spilled, do not attempt to start the engine until the spill is cleaned up and vapors have cleared.
  - Replace caps on fuel containers and tanks securely.

Sparks from static electricity can start fires or cause explosions. Flowing fuel can generate static electricity. To prevent static electricity sparks:

- Keep containers electrically grounded. Do not fill containers in a vehicle or on a truck or trailer bed with a plastic liner. Fill containers on the ground away from the vehicle.
- When practical, remove gasoline powered equipment from the truck or trailer and refuel it on the ground. If equipment must be refueled on the truck or trailer, refuel from a portable container rather than a dispenser nozzle.
- Keep the dispenser nozzle in contact with the rim of the fuel tank or container opening until fueling is complete. Do not use a nozzle lock-open device.
- If fuel is spilled on clothing change it immediately.

VIBRATION AND NOISE REDUCTION

⚠ WARNING

To reduce the impact of noise and vibration emission, limit the time of operation, as well as wear personal protective equipment.
Take the following points into account to minimize the vibration and noise exposure risks:

- Only use the seeder as intended by its design and these instructions.
- Ensure that the seeder is in good condition and well maintained.
- Use correct blades and ensure they are in good condition.
- Keep tight grip on the handle grips.
- Maintain this seeder in accordance with these instructions and keep blades well lubricated.
- Plan your work schedule to spread product use across a longer period of time.

RESIDUAL RISKS

⚠ WARNING

Even if you are operating this seeder in accordance with all the safety requirements, potential risks of injury and damage remain. The following dangers can arise in connection with the use of this product.

- Health defects resulting from vibration emission if the product is being used over long periods of time or not properly managed and maintained.
- Injuries and damage to property due to broken components or the sudden impact of hidden objects during use.
- Danger of injury and property damage caused by thrown objects.

HTS-20H

Dimensions:

Width.....31" (787 mm)
Length.....57" (1448 mm)
Length (handle folded).....46" (1168 mm)
Height (transport).....45" (1143 mm)
Height (handle folded).....33" (838 mm)
Maximum gate Width.....32" (813 mm)

Net Weight:

Weight.....300 lbs. (136 Kg)
Removable weights..... .....N/A

Speed:

Seed.....Forward...3 m.p.h
.....Reverse..1.5 m.p.h

Engine:
Model HTS-20H

Model.....GX270
Honda, 9.0 h.p., 4 cycle
Starter.....Recoil, on/off switch
Governor.....3600 RPM, no load
Fuel Tank.....1.4 gal. (5.3 L)

Drive:

Machine.....Hydro Gear Transmission
Primary.....Sheaves and Belts

Wheels:

Front & Rear.....13 bX 5.00-6

Seeding:

Seeding Width.....20"
Blade Depth.....10 position 0” -1.63"
Productivity.....26,400 sq. ft / hour
Number of blades..... double blade 26 total

WARNING LABELS

Warning labels are an important part of the safety system incorporated in this machine.

Replace labels if damaged or illegible.

⚠CAUTION

MUFFLER AND SHIELDS MAY EXCEED 150° F

100060

⚠WARNING | **⚠ADVERTENCIA**

BEFORE STARTING:
-Read and understand Operator manual and labels.
-Wear hearing and eye protection.
-Replace labels and Operator manual if lost or damaged.

Antes de comenzar:
-Lea y entienda el manual del operador y las etiquetas.
-Pide que alguien lea y explique el manual y las etiquetas a usted si usted no lee Inglés.
-Use protección ocular y auditiva.
-No haga funcionar sin los protectores en su lugar.
-Pare el motor antes de dar servicio
-La gente a más durante la operación.

4165977

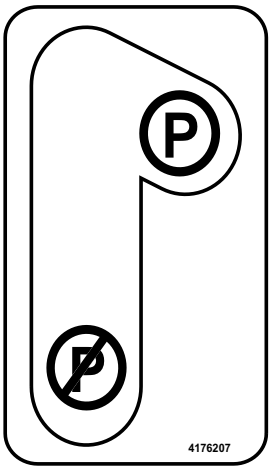

4176207

Grease bearing every 25 hours of operation.

4176205

⚠ DANGER

-ROTATING BLADE
-KEEP HANDS AND FEET AWAY

WARNING

Operation of This Equipment May Create Sparks That Can Start Fires Around Dry Vegetation. A Spark Arrestor May be Required. The Operator Should Contact Local Fire Agencies For Laws or Regulations Relating to Fire Prevention Requirements.

--This label meets California 4442.6

100504

Move right then pull out to engage transmission.

4176208

⚠ DANGER

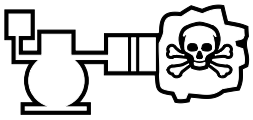

ENGINES PRODUCE CARBON MONOXIDE WHICH IS AN ODORLESS DEADLY POISON

DO NOT OPERATE IN AN ENCLOSED AREA

100070

⚠ WARNING

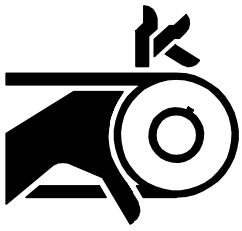

- ROTATING PARTS.
- DO NOT OPERATE WITH COVER REMOVED

4168760

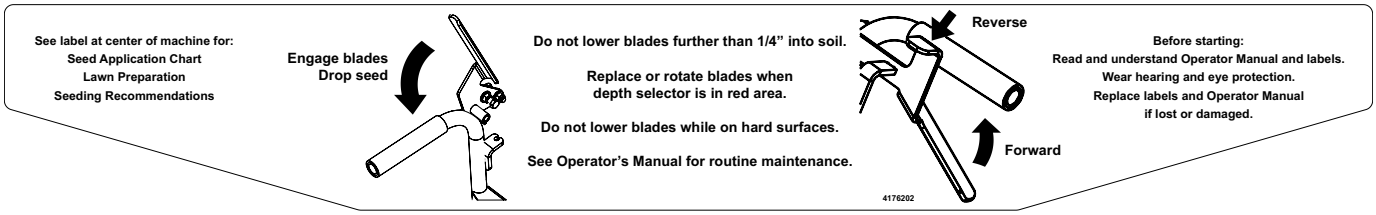

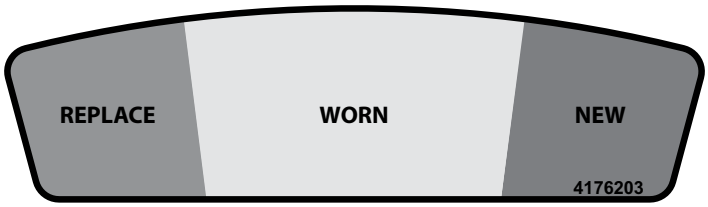

Green, yellow, red label near the lever indicate how much the blades are worn.
New blades will only need to be lowered into the green section.
Worn blades will be lowered into the yellow section.
Blades that need replacement will be lowered in the red section.

SEED APPLICATION CHART

THESE SETTINGS ARE APPROXIMATE GUIDELINES. SEEDING RATES ARE SPEED DEPENDENT. FASTER SPEED DELIVERS LESS SEED.

SEED TYPE	RATE LBS./ 1000 SQ. FT.	SETTING
BENT GRASS	1.5	1.0
	3.5	1.5
BERMUDA	2.5	1.0
	5.0	1.5
BLUEGRASS	1.5	2.0
	2.5	2.25
	4.0	2.75
	6.0	3.25
FESCUE	3.5	4.0
	5.0	4.25
	10	4.75
	12	5.25

SEED TYPE	RATE LBS./ 1000 SQ. FT.	SETTING
RYEGRASS	2.5	4.0
	5.0	4.25
	8.5	4.75
	10	5.0
CENTIPEDE	0.67	0.5
	1.25	1.0
	2.5	1.5
St. AUGUSTINE	0.75	1.25
	1.0	1.75
	1.33	2.25
	1.5	2.5

LAWN PREPARATION:

MOW LAWN TO 1 TO 2 INCH HEIGHT. DO NOT WATER PRIOR TO SEEDING. POWER RAKE TO DETHATCH LAWN AND REMOVE THATCH IN EXCESS OF 1/2 INCH. AERATE LAWN WITH CORE TYPE AERATOR. FERTILIZE LAWN WITH BROADCAST SPREADER.

SEEDING RECOMMENDATIONS:

FOR BEST RESULTS, OVERSEED IN TWO PASSES OF 1/2 APPLICATION RATE AT RIGHT ANGLES ON IN A CRISSCROSS PATTERN. WATER HEAVILY IMMEDIATELY THEN LIGHTLY FOR 10 TO 14 DAYS KEEPING SOIL MOIST. AFTER GERMINATION, WATER LESS OFTEN TO PROMOTE ROOT GROWTH.

SET-UP INSTRUCTIONS

NOTE: Units ship with no gas or oil.

1. Cut banding and roll seeder off pallet.

2. Unfold by pulling up on handle **1**. Slide lock rings **2** down to lock handle in upright position. Slide linkage coupler **3** to the locked position.

3. Add oil to the engine crankcase with the engine resting in a level position. Refer to the engine manufacturer's Operator's manual for the correct type and amount of oil.

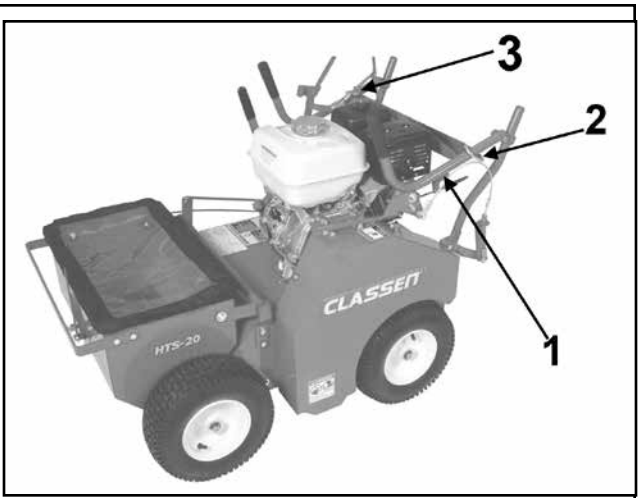

4. Fill the fuel tank according to the engine manufacturer specifications.

THROTTLE (A)
Controls engine speed and vacuum suction level.

CHOKE HANDLE (B)
Move to the “CHOKE” position to apply the choke. Move to the “RUN” position to remove the choke.

FUEL VALVE (C)
Move to the “OFF” position to shut off the fuel whenever transporting the machine by trailer or truck or during storage. Move to the “ON” position before starting the engine. The “OFF” position also can be used to “KILL” the engine as a “KILL” switch is combined with the fuel shutoff.

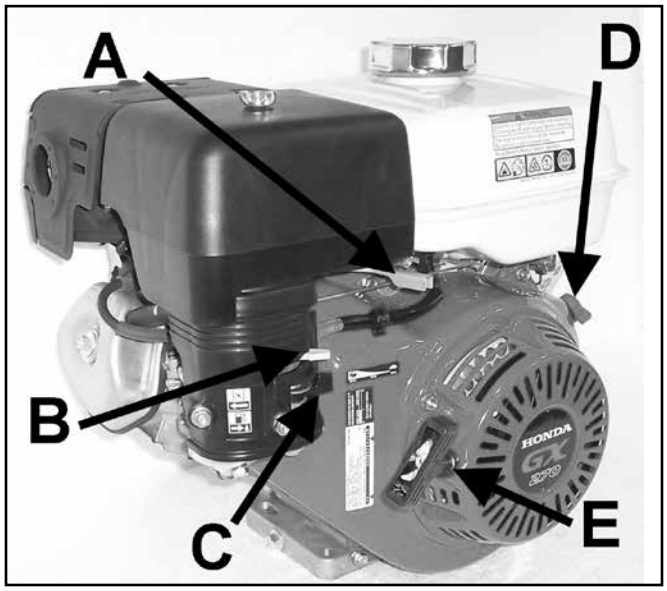

ENGINE SWITCH (D)
Move to the “OFF” position to stop the engine. Move to the “ON” position before starting engine.

RECOIL STARTER HANDLE (E)
Pull to turn over the engine to start it. Guide the recoil starter handle back to the rope guide for best rope life. Allowing the rope to snap back will shorten rope life.

FREE WHEEL ROD (F)
Move the free-wheel rod to the right, then pull out to engage the transmission. Push in, then move to the left to disengage the transmission.

PARKING BRAKE ROD (G)
Move parking brake rod slightly up, to the left, and then down to disengage the brake. Pull brake rod up and then to the right, allowing it to rest in the groove, in order to engage the brake.

FORWARD / REVERSE HANDLE (H)
Pull right control handle up to move the unit forward or push down to move in reverse.

BLADE / SEED HANDLE (I)
Push down left control handle to engage the blade and to begin dropping seed. Release to disengage.

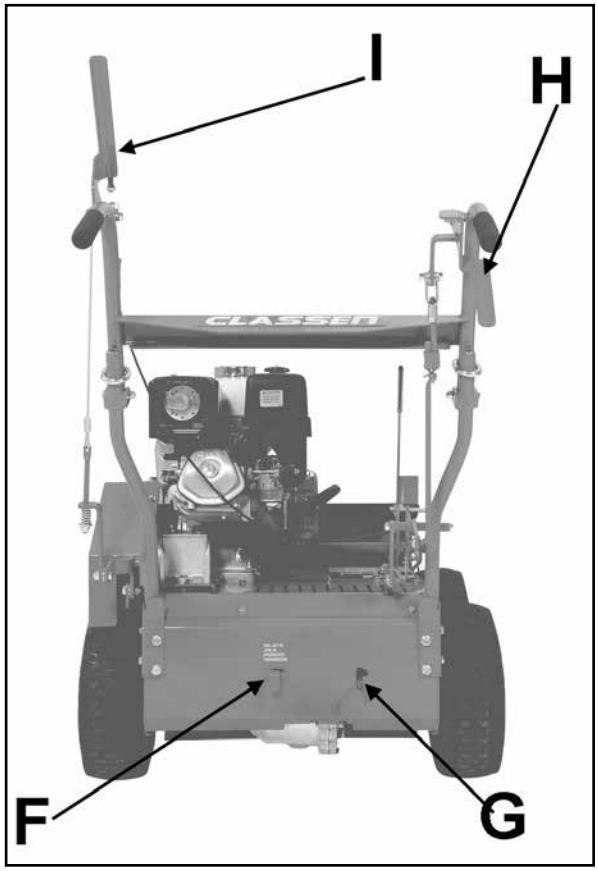

BLADE / SEED HANDLE (J)

Pull the depth adjustment lever out and move it towards the handles in order to lower the blades (deeper into soil). Never lower the blades while on hard surfaces. Blades should never be lowered into soil more than ¼". Operating the machine with blades deeper than ¼" will result in damage to the machine. In addition, cutting into the soil deeper than ¼" will hinder germination of seed.

Green, yellow, red labels near the lever indicate how much the blades are worn. New blades will only need to be lowered into the green section. Worn blades will be lowered into the yellow section. Blades that need replacement will be lowered in the red section.

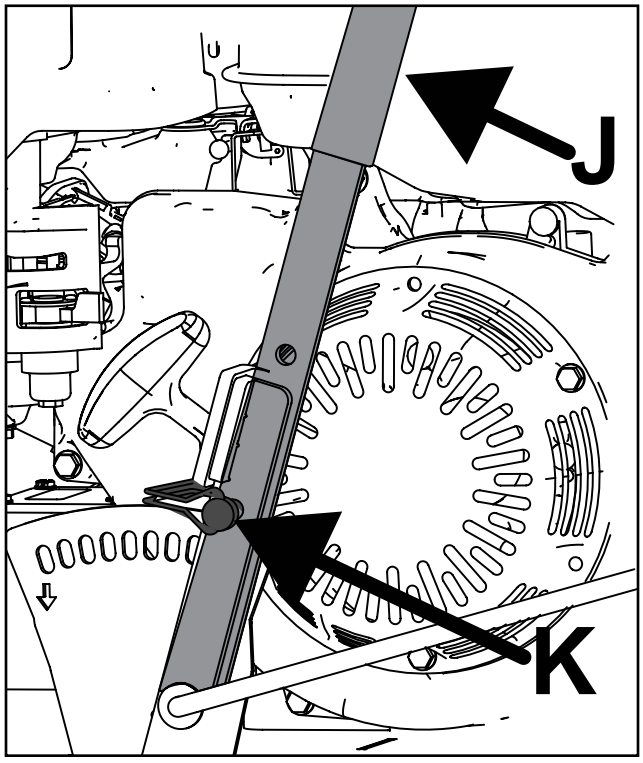

FLOATING SEED BOX PIN (K)

Unlatch and remove the pin to engage the floating seed box. A floating seed box maintains a constant height when riding over small bumps in the soil. Leave the pin engaged to not use the floating seed box feature.

SEED GATE ADJUSTMENT (L)

Loosen knob and adjust seed flow selector to desired number for seed dispersion rate. See the see application chart label at the center of the machine to determine number. Tighten knob.

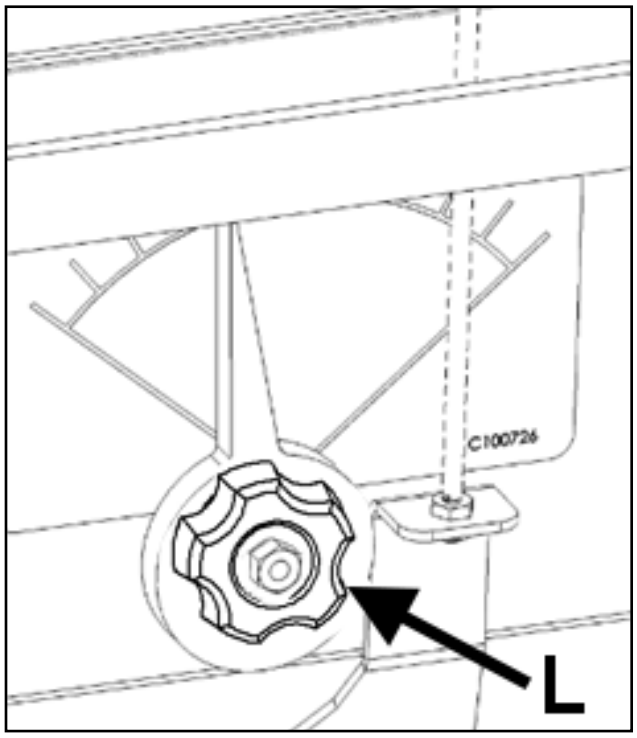

BEFORE STARTING THE ENGINE

1. Read the Operator and Engine Manuals. Become familiar with the controls, how each functions, and what it operates.

2. Check the engine oil level and transaxle fluid level. Add if necessary.

3 Fill the fuel tank with good quality, clean, unleaded regular gasoline (petrol). Use a funnel to avoid spilling.

STARTING THE ENGINE

1. Open the fuel valve.

2. Move the engine switch to the “ON” position.

3. Move the choke lever to the “CHOKE” position for cold starts. (Choke may not be required to start a warm engine. Too much choke use may flood the engine and cause hard starting.)

4 Move the throttle to midway between the fast and slow positions.

5. Pull the recoil starter slowly until resistance is felt, then pull firmly to start the engine.

6. After the engine starts, slowly back the choke off until the engine runs with no choke at all.

7. Set the desired engine speed with the throttle. Keep engine speed low until familiar with driving the machine.

OPERATING THE SEEDER

1. Ensure both handles are in a released, neutral position.

2. Ensure blades are in the highest position, and are not touching the ground.

3. Start the engine, keep engine speed low until familiar with driving the machine.

4. Release the parking brake and engage the transmission.

5. Drive the machine to the area to be seeded.

6. Once on soil, move depth adjustment so that it is a maximum of 1/4” into the soil. Do not lower blades while on a hard surface.

7. Engage the blade and seed handle and drive machine to seed.

8. Once seeding is complete, raise blades to highest position before driving the machine on hard surfaces. Failure to raise the blade before driving on hard surfaces will cause damage to the machine.

STOPPING / TRANSPORTING THE SEEDER

⚠ DANGER

DO NOT run the engine in an enclosed area where dangerous carbon monoxide fumes can collect.

1. Ensure that the blades have been raised to the highest position. Failure to raise the blades before driving on hard surfaces will cause damage to the machine.

2. Move the engine switch to the OFF position.

3. Turn the fuel valve to the OFF position.

4. Disengage the transmission if moving the machine in an enclosed area.

5. Once the machine is in its final location, engage the transmission.

6. Engage the parking brake.

7. If folding the handles is desired, slide the lock rings up on the handle, slide the linkage coupler up on the transmission linkage, and fold the handles downward. Failure to slide the linkage coupler prior to folding the handles can result in damage to the linkage.

STORAGE

To prevent possible explosion or ignition of vaporized fuel, do not store equipment with fuel in tank or carburetor in an enclosure with open flame (for example, a furnace or water heater pilot).

Before the equipment is put into storage for any period exceeding 30 days:

1. Drain all fuel from the fuel tank and fuel lines.

2. Start the engine and run until all the fuel is used from the carburetor float bowl and the engine stops.

3. While the engine is still warm, drain the crankcase oil and replace with the proper weight oil corresponding to the season the equipment will be next used.

4. Remove the spark plug and squirt a small amount of engine oil into the cylinder. Slowly pull the starter a few times to distribute oil in the cylinder and reinstall the spark plug.

5. Top off if necessary. See engine manual for details.

To put the equipment into service after an extended period of storage:

1. Check for loose parts and tighten if necessary.

2. Fill the fuel tank and then check the engine oil level.

3. Reinstall spark plug.

4. Start the engine and check for fuel leaks. Repair any leaks before operating the unit.

Washing the machine is possible with water and a mild detergent. Ensure all detergent is removed after cleaning and thoroughly dry machine.
DO NOT use water near engine.
DO NOT use a pressure washer on the machine.

MAINTENANCE

⚠ WARNING

Stop the engine and remove spark plug wire before performing any maintenance.
When replacement parts are required, use genuine Classen parts or parts with equivalent characteristics, including type, strength and material. Failure to do so may result in product malfunction and possible injury to the operator and/or bystanders.
Carbon monoxide present in the exhaust is an odorless and deadly gas. Never start or run the engine where exhaust fumes can collect. Provide enough fresh air to keep fumes from getting too strong.
Replace any warning decals that become illegible immediately.

Maintenance Procedure	Each Use	Every 25 Hours
Tighten any hardware (nuts, bolts, etc.) that are found loose.	X	
Replace any broken or missing hardware (nuts, bolts, etc.)	X	
Check engine oil	X	
Check engine air filter	X	
Check tire pressure	X	
Check blades for damage and wear	X	
Ensure seed gate opens and closes freely	X	
Check for debris near wheels and under machine	X	
Check to see that set screws on pulley are tight		X
Check condition of belts, guards, blades for damage or wear		X
Lubricate all linkages		X
Grease bearings		X

MAINTAINING TIRE PRESSURE

Check the tire pressure before each use. The maximum air pressure is not to exceed 40 psi (176 kPa).

LUBRICATING LINKAGES

Every 25 hours lubricate all linkages with dry-film Teflon lubricant. NOTE: Use a dry coating lubricant to avoid attraction of dirt.

BLADE ROTATION

Check the blades before each use. If the blades are worn on one side, it is possible to rotate them.

⚠ WARNING

1. Turn the engine to the OFF position and remove the spark plug cable.
2. Thoroughly inspect the blades for cracks and wear. If a blade is worn, it is recommended to rotate or replace all blades at once. If blades are installed at different lengths, then slicing application will not be consistent. Additionally, the blades may inadvertently be lowered beyond 1/4" into the ground, resulting in damage to the machine.
3. Remove two bolts and nuts holding a blade. Rotate the blade 180°, so the beveled side of the blade faces away from the shaft assembly.

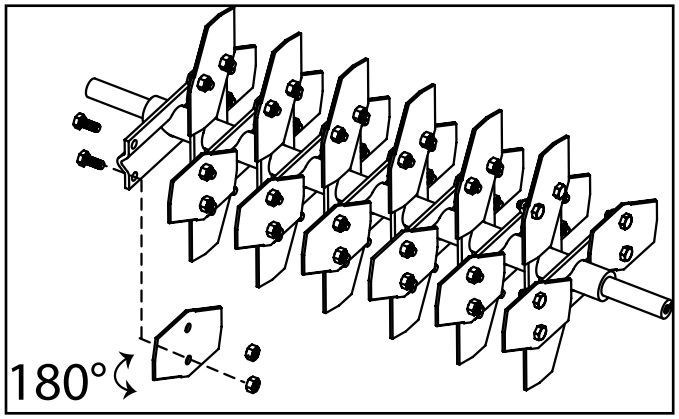

4. Reinstall on shaft with bolts and nuts in orientation removed.
5. Repeat for all blades.
6. Reinstall Blade Assembly following 'Blade Assembly Replacement procedure.

GREASE BEARINGS

Grease Bearings every 25 hours. There are four grease bearings: two for the shaft assembly, and two for the front wheels.

⚠WARNING

Grease front wheel bearings:

1. Turn engine to the OFF position and remove the spark plug cable.

2. Using two people, push down on the handles until the front wheels slightly elevate off of the floor. Insert a block of wood under the front hopper.

3. Remove the wheel e-rings and washers on both front wheels. Remove wheels and keys, do not lose wheel keys.

4. Connect the grease gun and pump approximately 0.1 ounces of grease (one standard pump) into each bearing. NOTE: Over-packing a bearing with grease can result in overheating of bearing and premature wear.

5. Slide wheels on machine and align the wheel keyhole with the shaft keyhole and reinsert keys. Reinstall washers and e-rings.

6. Using two people, push down on the handles until hopper is slightly elevated off of blocks. Remove blocks, and carefully lower machine.

⚠WARNING

Greasing shaft assembly bearings:

1. Turn the engine to the OFF position and remove the spark plug cable.

2. Remove the right shaft cover by removing the two bolts holding it on.

3. Remove the left shaft cover by removing the five bolts and washers holding it on.

4. Connect the grease gun and pump approximately 0.1 ounces of grease (one standard pump) into each bearing. NOTE: Over-packing a bearing with grease can result in overheating of bearing and premature wear.

5. Reinstall covers and spark plug cable.

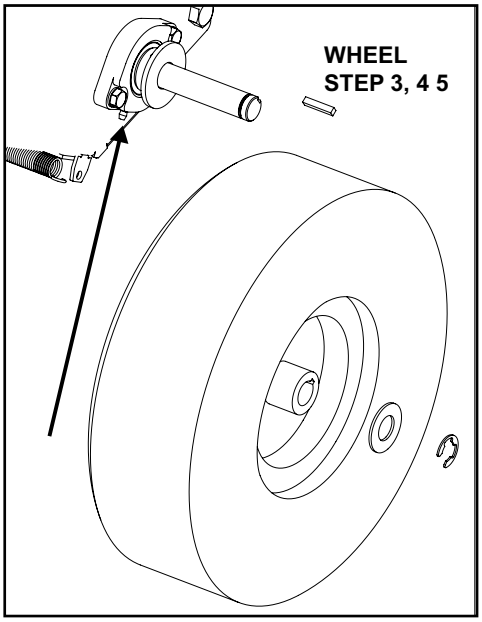

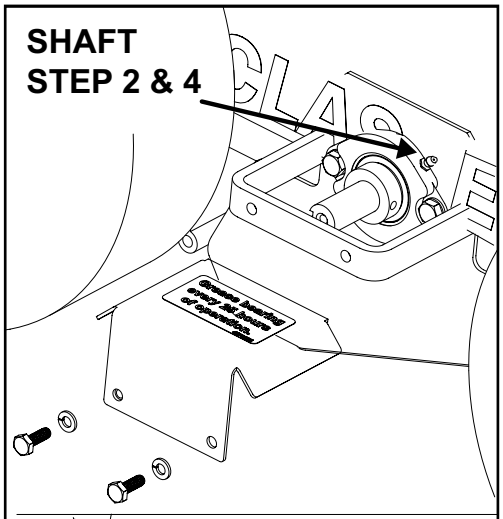

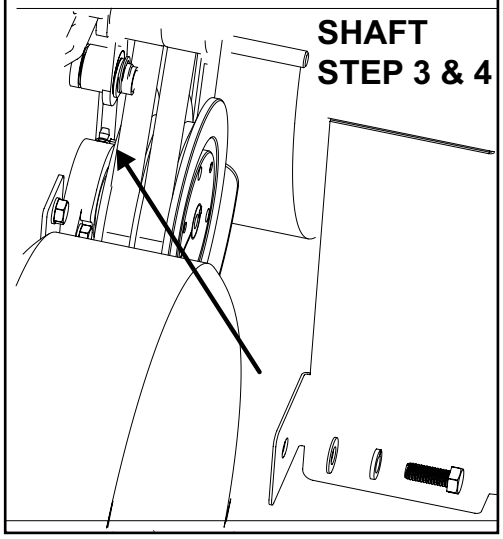

BLADE ASSEMBLY REPLACEMENT

⚠WARNING

1. Turn the engine to the OFF position and remove the spark plug cable.

2. On right side of unit (from operator position) first remove the bolts and washers holding on the right shaft cover and then remove cover.

3. Remove bolts ,washers ,bearing collar and loosen set screw. Remove the shaft guard and the bearing from shaft.

4. On left side of unit, remove front belt shield.

5. Remove bolts from pulley hub and slide pulley and the 2 belts off the shaft.

6. Remove bolts, washers and left shaft cover.

7. Remove bolts ,washers ,bearing collar and loosen set screw. Slide bearing off shaft.

8. Remove old shaft assembly. Attach new assembly shaft on left side of unit by sliding on bearing, and locking down set screw with Loctite 242. Attach bearing to unit with bolts and nuts removed in Step 7 Connect the grease gun and pump approximately 0.1 ounces of grease (one standard pump) into each bearing. NOTE: Over-packing a bearing with grease can result in overheating of bearing and premature wear.

9. Attach left shaft cover removed in Step 6.

10 Slide the pulley with hub back onto shaft with both belts making sure the key is in the keyway and is engaged with the hub.

11. When the pulley is on and the belts are straight, lock down pulley by tightening the 2 bolts that go into the hub. See figure for placement of belt.

12. Next reinstall front belt shield.

13. Move to right side of unit and slide shaft through shaft guard and bearing. Attach bearing collar and shaft guard to secure both to the unit with hardware removed in Step 3. Lock down set screw on bearing with Loctite 242. Connect the grease gun and pump approximately 0.1 ounces of grease (one standard pump) into each bearing. NOTE: Over-packing a bearing with grease can result in overheating of bearing and premature wear.

14. Reinstall right cover removed in Step 2.

15. Attach spark plug wire.

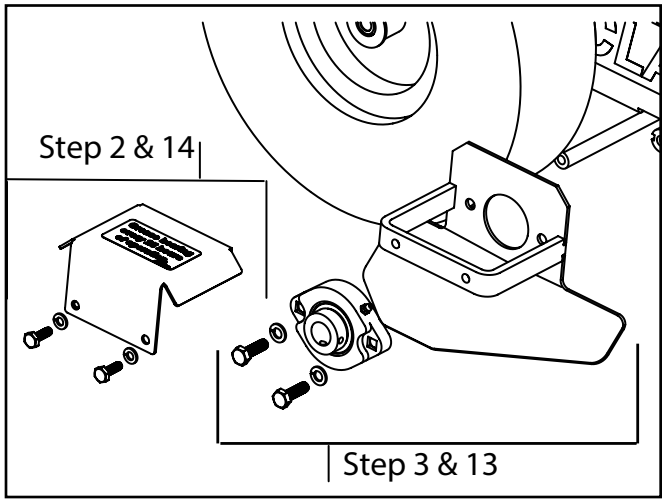

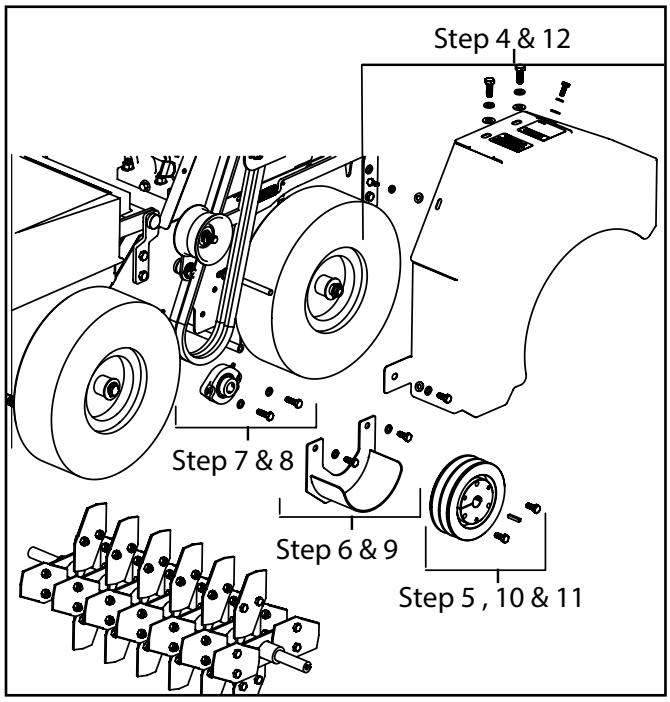

BLADE REEL BELTS REPLACEMENT

Check the belts for wear every 25 hours of operation. Replace belt if it is cracked, squeals during operation, or slips.

⚠CAUTION Do not place fingers between pulley and belt while rotating the assembly. Fingers can be pinched between pulley and belt.

⚠WARNING

1. Turn the engine to the OFF position and remove the spark plug cable.
2. On left side of unit, remove front belt shield.
3. Remove bolts, washers and left shaft cover.
4. Remove the blade reel belts.
5. Install new belts. See figure for belt placement.
6. Reinstall cover removed in Step 3. Ensure that the belt is routed to the inside of the two guide bolts.
7. Reinstall cover removed in Step 2.
8. Attach spark plug wire.
9. Run the machine to ensure blade reel engages and disengages.

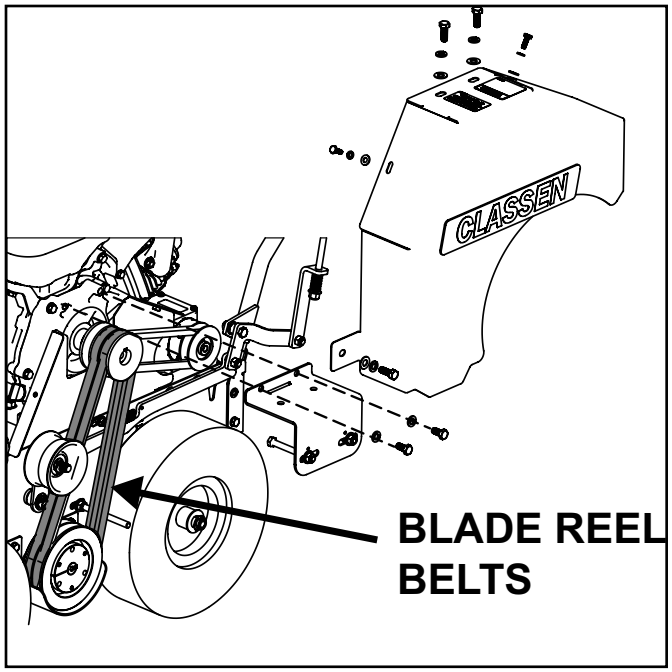

TRANSMISSION BELT REPLACEMENT

Check the belts for wear every 25 hours of operation. Replace belt if it is cracked, squeals during operation, or slips.

⚠CAUTION Do not place fingers between pulley and belt while rotating the assembly. Fingers can be pinched between pulley and belt.

⚠WARNING

1. Turn the engine to the OFF position and remove the spark plug cable.

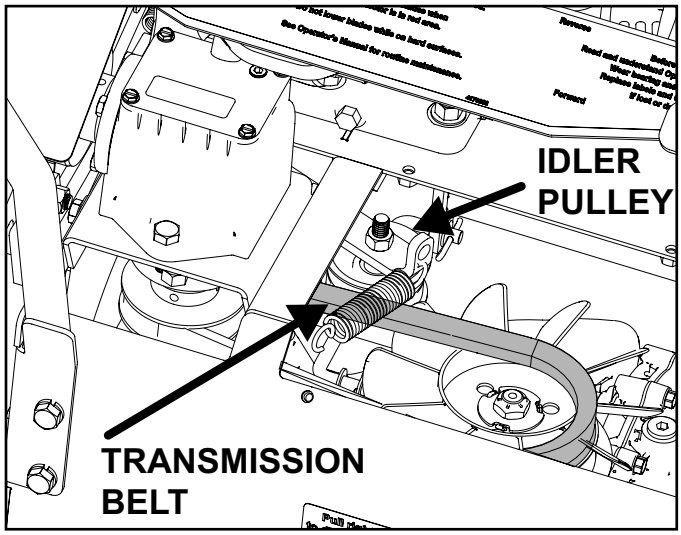

2. Remove the five bolts and washers on the frame access plate and remove the plate.
3. Pull on idler pulley to relieve belt tension and remove the transmission belt.
4. Install new belt.
5. Reinstall the frame rear access plate.
6. Reinstall Blade Reel Belts per Blade Reel Belts Replacement Section.
7. Attach spark plug wire.

GEAR BOX BELT REPLACEMENT

Check the belts for wear every 25 hours of operation. Replace belt if it is cracked, squeals during operation, or slips.

⚠CAUTION

Do not place fingers between pulley and belt while rotating the assembly. Fingers can be pinched between pulley and belt.

⚠WARNING

1. Turn the engine to the OFF position and remove the spark plug cable.
2. Follow the Blade Reel Belts Replacement Section and remove the blade reel belts.
3. Follow the Transmission Belt Replacement Section and remove the transmission belt.
4. Loosen the two bolts located behind the belt tensioner plate under the gearbox with a wrench
5. Using a deep socket, loosen the bolt located behind the idler pulley spring and under the gearbox inside main body.
6. Push the gearbox towards the engine pulley and remove the gearbox belt.
7. Install new belt.
8. Pull the gearbox away from the engine pulley and tighten the bolt under the gearbox inside of the main body.
9. Pull the gearbox away from the engine pulley and tighten the belt tensioner plate. **Ensure new belt is tensionied properly by pressing on the belt at mid-span. The belt should not deflect by more than 1/2".**
10. Reinstall the Transmission belt per Transmission Belt replacement Section.
11. Reinstall Blade Reel Belts per Blade Reel Belts Replacement Section.
12. Attach spark plug wire.

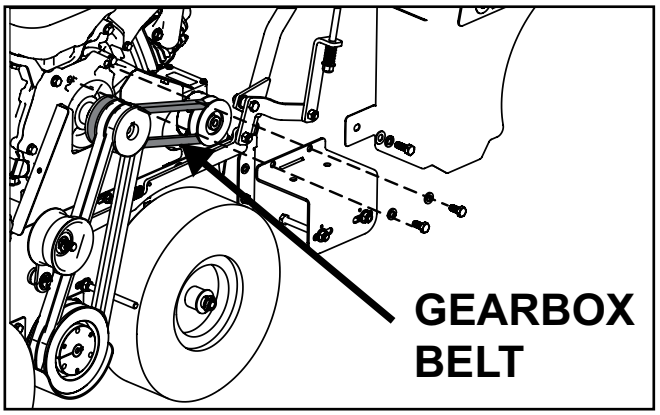

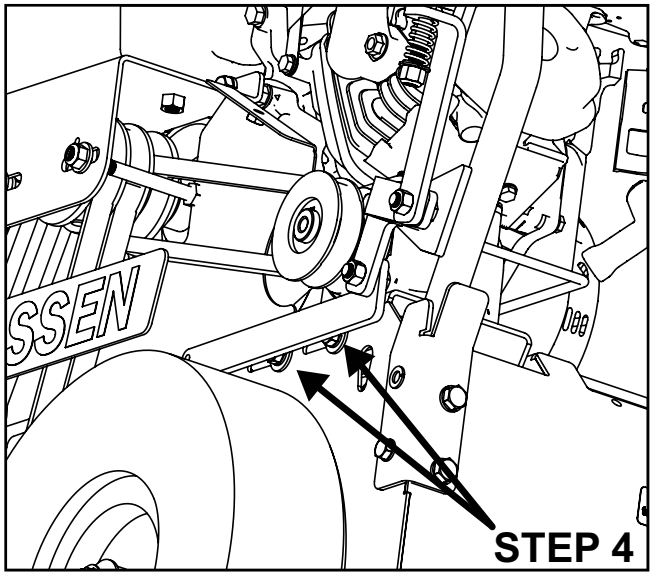

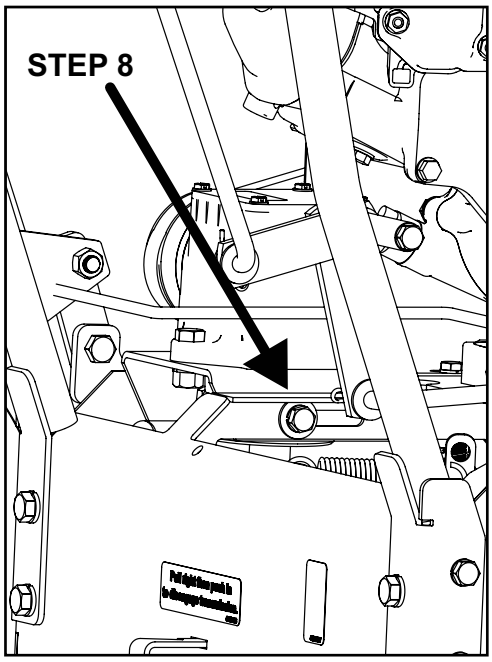

TROUBLESHOOTING GUIDE		
PROBLEM	**POSSIBLE CAUSE**	**CORRECTIVE ACTION**
A. Engine will not start.	1. Out of gasoline. 2. Spark plug lead wire loose or disconnected. 3. Defective spark plug. 4. Throttle control lever not in proper position. 5. Engine flooded or flooding. 6. Stale or contaminated gasoline. 7. Engine switch off. 8. Oil level low. 9. Front cover is loose on unit.	1. Fill gasoline tank. 2. Reconnect spark plug lead wire. 3. Replace spark plug. 4. Move throttle control lever to start position. 5. Start engine with choke fully open. 6 Drain, clean tank and system and refill with fresh gasoline. 7. Turn engine switch to ON position. 8. Fill crankcase to proper oil level. 9. Make sure front cover is secured properly on unit.
B. Loss of power, hard starting.	1. Spark plug lead wire loose. 2. Defective spark plug. 3. Carburetor out of adjustment. 4. Air cleaner dirty. 5. Air vents clogged or plugged.	1. Tighten spark plug lead wire. 2. Replace spark plug. 3. Properly adjust carburetor. 4. Clean and service air cleaner. (See the engine Operation and Maintenance illustrations.) 5. Clean vent in gasoline tank cap and carburetor.
C. Engine will not idle properly.	1. Idle speed too slow. 2. Spark plug gap incorrect. 3. Air cleaner dirty.	1. Adjust carburetor idle speed or idle mixture. 2. Set spark plug gap; see your Engine Manual 3. Clean and service air cleaner. (See the engine Operation and Maintenance illustrations.)
D. Engine runs hot or overheats.	1. Oil level low. 2. Engine cooling fins or baffles clogged with dirt and debris. 3. Carburetor out of adjustment.	1. Fill crankcase to proper oil level. 2. Clean and remove obstructions. 3. Readjust carburetor.
E. Excessive vibration during movement or usage.	1. Broken engine pulley. 2. Loose idler or engine pulley. 3. Blades are worn or bent. 4. The belt is damaged. 5. Loose engine mount bolts.	1. See an Authorized Service Dealer. 2. Tighten pulley(s). 3. Replace blades. 4. Install a new belt. 5. Tighten engine mounting bolts.
F. The machine does not move forward/reverse when engine is on.	1. Low transmission oil level. 2. The drive or pump belt is disengaged or loose. 3. Drive cable is broken or is misadjusted.	1. Add hydraulic oil to the transmission. 2. Change the belt. 3. Replace or adjust cable.
G. The machine moves to the left or the right when in drive or during usage.	1. Blades worn unevenly. 2. Deflated or under inflated tire.	1. Replace blades. 2. Inflate tires to proper pressure.

PARTS SECTION

HANDLE ASSEMBLY

HTS-20HD

FIGURE 1

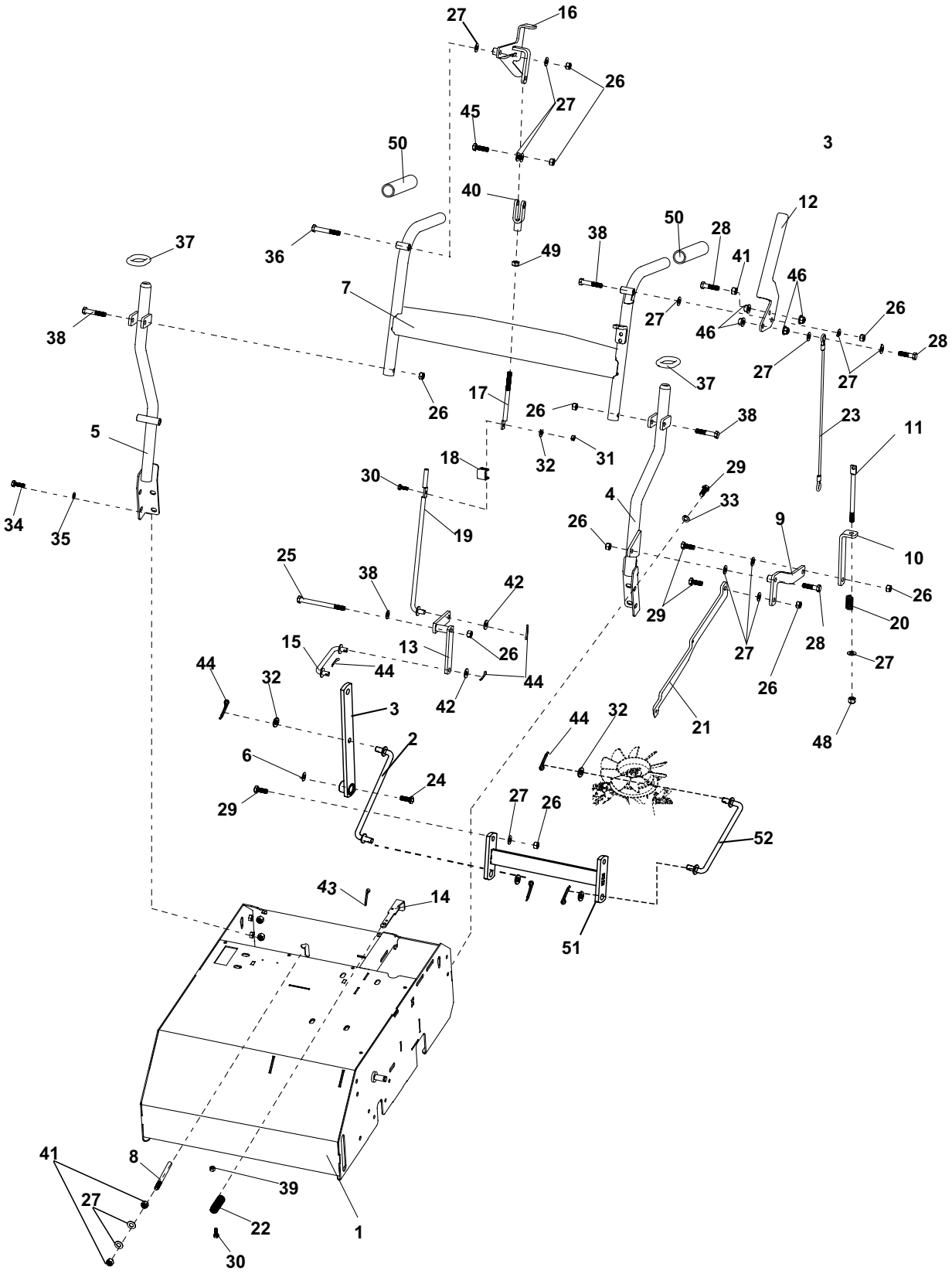

HTS-20HD

FIGURE 1

ITM	PART NO.	DESCRIPTION	QTY
1	4176461	S-MAIN BODY W/ LABS HD	1
2	C400474.7	SP CONN ROD WELDMEN	1
3	C400476.7	SP LINKAGE CONN ARM	1
4	C400461.7	LFT LOWER HANDLE BAR	1
5	C400462.7	RT LOWER HANDLE BAR	1
6	C500034	BOLT, 1/2 FLAT	1
7	4176441	S-UPR HANDLE WLDMT	1
8	C400465.7	BRAKE ROD	1
9	C400469.7	LFT LWR CONN WLDMNT	1
10	C400470.7	LFT LWR CONN ARM	1
11	C400471.7	LFT LOWER FLAT ROD	1
12	C400472.7	LFT CONTROL HANDLE	1
13	C400473.7	RT LWR LEVER WLDMNT	1
14	C400475.7	FREE WHEEL HANDLE	1
15	C400477.7	RT LWR CONN WLDMNT	1
16	C400479.7	BLADE ENGMNT LEVER	1
17	C400482.7	SP UPPER CONN ROD	1
18	C400483.17	LINKAGE COUPLER	1
19	C400484.7	SP LOWER CONN WLDMNT	1
20	4169763	SPRING, LEFT CONTRL	1
21	C400491.7	BELT TENSIONER LATE	1
22	4170082	C750 CENTURY SPRING	1
23	4170084	TENSIONER CABLE	1
24	C500149	BOLT, 1/2-13 x 2	1
25	C500165	BOLT, 3/8-16 X 4-1/2	1
26	C500041	NUT, 3/8-16 LOCK	11
27	C500042	WASHER, 3/8" FLAT	17
28	C500146	BOLT, 3/8-16 X 1-1/2	3
29	C500043	BOLT, 3/8-16 X 1	8
30	C500029	BOLT, 1/4-20 x 3/4	7
31	C500139	NUT, 1/4-20 LOCK	1
32	C500088	WASHER, 1/4" FLAT	5
33	C500130	WASHER, 3/8 LOCK	4
34	C500133	BOLT, 5/16-18 x 1	4
35	C500115	WASHER, 5/16 LOCK	4
36	C500020	BOLT, 3/8-16 x 2-1/2	1
37	C100251	RING, HANDLE LOCK	2
38	C500091	BOLT, 3/8-16 x 2	3
39	C500068	NUT, 1/4-20 NYLOC	1
40	C500026	CLEVIS YOKE, 3/8" FTH	1
41	C500129	NUT, 3/8-16	3
42	C500083	WASHER, 5/16 FLAT	2
43	C500016	PIN, 5/32" x 1-1/4" COTTER	1
44	4170473	PIN, 1/8 X 1 COTTER	7
45	C500134	BOLT, 3/8-16 x 1-1/4	1
46	C500081	NUT, 3/8-16 WHIZ LOCK	4
47	C500137	WASHER, 1/4 LOCK	5
48	C500076	NUT, 3/8-16 NYLOC	1
49	C500025	NUT, 3/8-24	1
50	4169758	FOAM HANDLE GRIP	2
51	C400467.7	SP TRANSFER WELDMENT	1
52	C400495.7	SP CONN ROD WELDM	1

***NOT ILLUSTRATED**

FIGURE 2

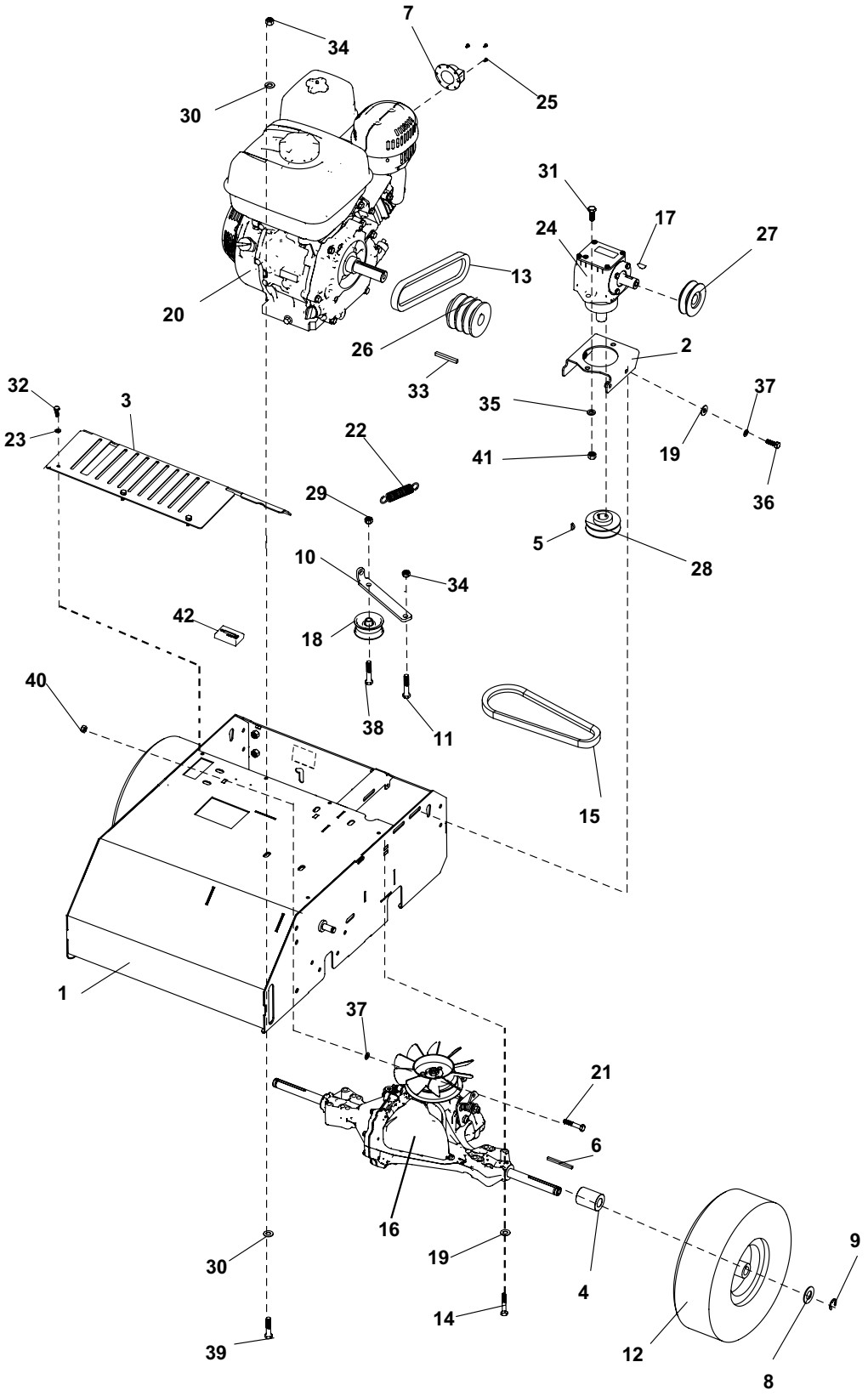
7
34
25
30
31
17
24
27
13
20
26
2
33
32
3
35
37
23
22
41
19
36
29
5
28
10
34
42
18
40
38
11
15
1
37
21
6
16
30
19
4
9
14
39
12
8

FIGURE 2

ITM	PART NO.	DESCRIPTION	QTY
1	4176461	S-MAIN BODY W/LABS HD	1
2	C400452.17	RT ANGL GEARBOX TENSION	1
3	C400463.17	FRAME REAR ACCESS PLATE	1
4	C400457	REAR WHEEL SPACER	2
5	64164-48	KEY, 5/32 X 3/16 X 5/8	1
6	64164-49	KEY, 3/16” SQ X 2-1/2”	2
7	4170466	ENGINE EXHAUST DIVERTER	1
8	C400480	WASHER, WHEEL	2
9	64221-08	E-RING .750	2
10	C400492.7	TRANSAXLE BELT PLATE	1
11	C500146	BOLT, 3/8-16 x 1-1/2	1
12	4169760	WHEEL & TIRE 13XX5.0X6	2
13	4169756	6927 GEARBOX V-BELT	1
14	C500143	BOLT, 5/16-18 x 2-1/2	4
15	4169755	A26 TRANSMISSION V-BELT	1
16	C100585	TRANSAXLE	1
17	121	KEY, 3/16" x 3/4" HALF MOON	1
18	C100010	PULLEY, IDLER	1
19	C500083	WASHER, 5/16 FLAT	2
20	4166074	ENGINE, HONDA GX270	1
21	C500074	BOLT, 5/16-18 X 1-3/4	1
22	4170427	SPRING, C-191	1
23	C500137	WASHER, 1/4 LOCK	2
24	4169765	GEARBOX, RT ANGLE	1
25	265	SCREW, M4 X 8 THREAD CUT	3
26	4169748	PULLEY, MOTOR 3BK28 X 1	1
27	4169751	PULLEY, GEARBOX 3-1/8X7/8	1
28	4169754	PULLEY, GEARBOX 3 X 7/8	1
29	C500041	NUT, 3/8-16 LOCK	1
30	C500042	WASHER, 3/8" FLAT	8
31	C500043	BOLT, 3/8-16 X 1	2
32	C500029	BOLT, 1/4-20 x 3/4	3
33	64164-50	KEY, 1/4" SQ X 2.20" LONG	1
34	C500076	NUT, 3/8-16 NYLOC	4
35	C500130	WASHER, 3/8 LOCK	2
36	C500133	BOLT, 5/16-18 x 1	6
37	C500115	WASHER, 5/16 LOCK	9
38	C500091	BOLT, 3/8-16 x 2	1
39	C500079	BOLT, 3/8-16 X 1-3/4	4
40	C500101	NUT, 5/16-18	1
41	C500129	NUT, 3/8-16	2
42	C100443	HOUR METER	1

***NOT ILLUSTRATED**

ITM	PART NO.	DESCRIPTION	QTY

FIGURE 3

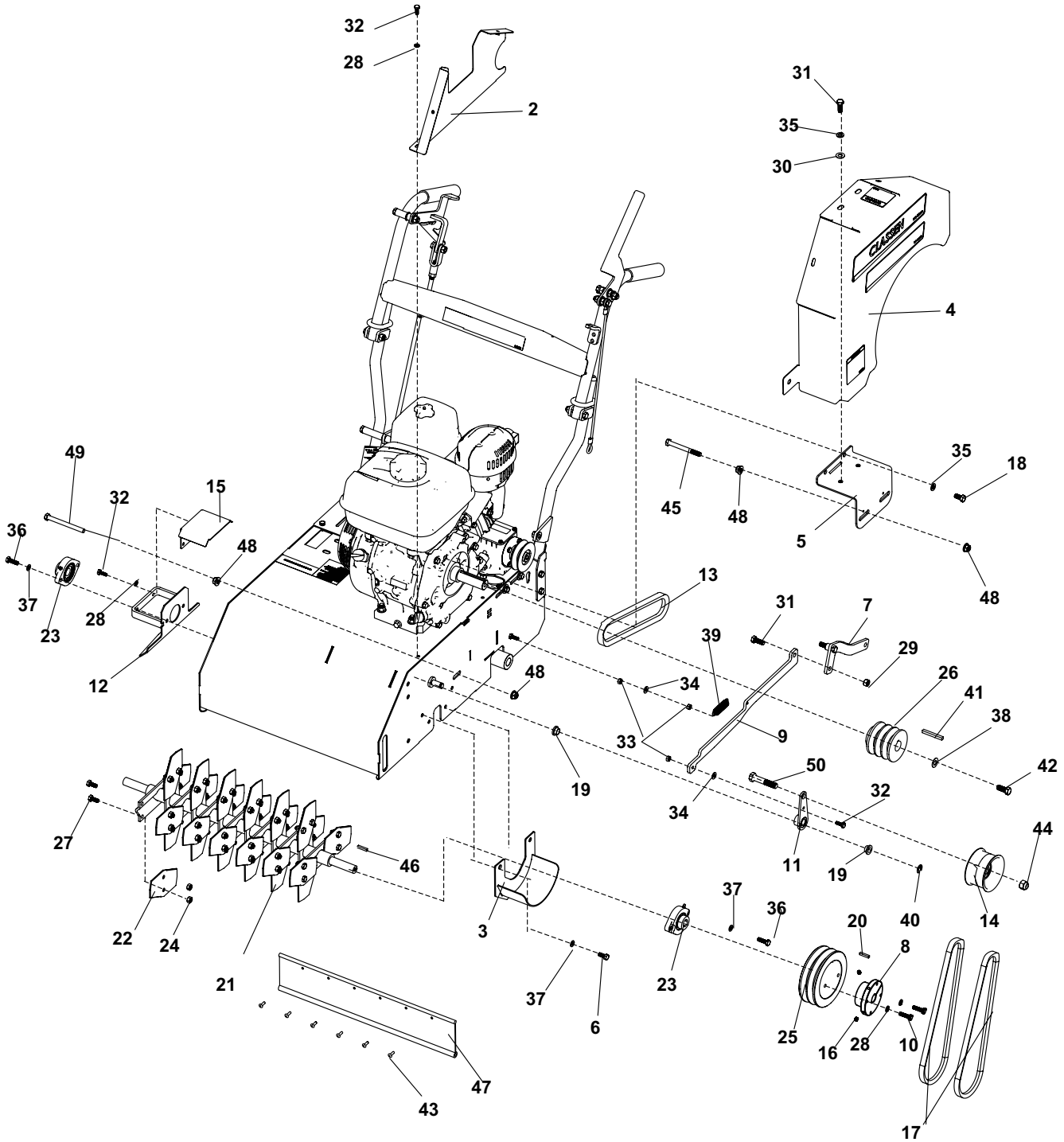
32
28
2
31
35
30
4
49
32
15
36
48
37
23
28
12
45
48
5
35
18
48
13
31
7
39
29
26
41
38
42
48
34
33
9
19
50
34
32
11
19
44
27
46
22
24
21
3
37
36
23
37
6
20
8
40
14
25
16
28
10
17
47
43

HTS-20HD

FIGURE 3

ITM	PART NO.	DESCRIPTION	QTY
1	4170714	S-MAIN BODY W/ LABS	1
2	C400493.17	BELT SHIELD WLDMT	1
3	C400453.17	LFT SHAFT COVER WLDMT	1
4	4176460	S-FRONT BELT SHIELD HD	1
5	C400459.17	BELT CVR MOUNT WLDMT	1
6	C500140	BOLT, 5/16-18 x 3/4	1
7	C400469.7	LFT LWR CONN ARM	1
8	4169750	BEARING-HUB 3/4”	1
9	C400491.7	BELT TENSIONER PLATE	1
10	C500029	BLT-1/4-20 X 3/4	2
11	C400498.17	ENGAGEMENT ARM	1
12	C400454.17	RIGHT SHAFT GUARD	1
13	4169756	V-BELT 6927 GEARBOX	1
14	C100208	PULLEY, DOBL IDLER	1
15	4176442	S-RT SHAFT GUARD CVR	1
16	C500003	KEY, 1/4 x 7/8 HALF MOON	1
17	4169757	BELT, 6941 REEL	2
18	C500177	BOLT, 3/8-16 X 3/4	2
19	C100052	BEARING, CONTROL	2
20	C500011	KEY, 3/16 SQUARE X 1	1
21	C600030	BLADES SUB-ASSEMBLY,	1
22	C100310	BLADE W/ 5/16" HOLES	26
23	4169759	BEARING, S2 BOLT 3/4	2
24	C500217	NUT, 5/16-18 AUTO. LOCK	52
25	4169749	PULLEY, REEL 2BK52H	1
26	4169748	PULLEY, MOTOR 3BK28X1	1
27	C500216	BOLT, 5/16-18 X 3/4 GR 8	52
28	C500137	WASHER, 1/4 LOCK	4
29	C500041	NUT, 3/8-16 LOCK	1
30	C500042	WASHER, 3/8" FLAT	8
31	C500043	BOLT, 3/8-16 X 1	2
32	C500029	BOLT, 1/4-20 x 3/4	3
33	C500139	NUT, 1/4-20 LOCK	1
34	C500088	WASHER, 1/4" FLAT	1
35	C500130	WASHER, 3/8 LOCK	2
36	C500133	BOLT, 5/16-18 x 1	6
37	C500115	WASHER, 5/16 LOCK	9
38	64163-115	7/16" SAE FLAT WASHER	1
39	C100655	SPRING, SMALL	1
40	C500078	E-RING, 1/2"	1
41	64164-50	KEY, 1/4" SQ X 2.20" LONG	1
42	64123-11	BOLT, 7/16-20 X 1"	1
43	C500238	RIVET, 3/16 X 5/8 POP	6
44	64229-05	NUT-NYLON LOCK 1/2-13	1
45	C500170	BOLT, 3/8-16 X 3-1/2	2
46	C500011	KEY, 3/16 SQUARE X 1	1
47	C300015	FLAT, DRAG SHIELD	1
48	C500081	NUT, 3/8-16 WHIZ LOCK	6
49	64123-139	BLT-HEX 3/8-16X4	1
50	C500135	BOLT, 1/2-13 x 2-1/2	1

*NOT ILLUSTRATED

FIGURE 4

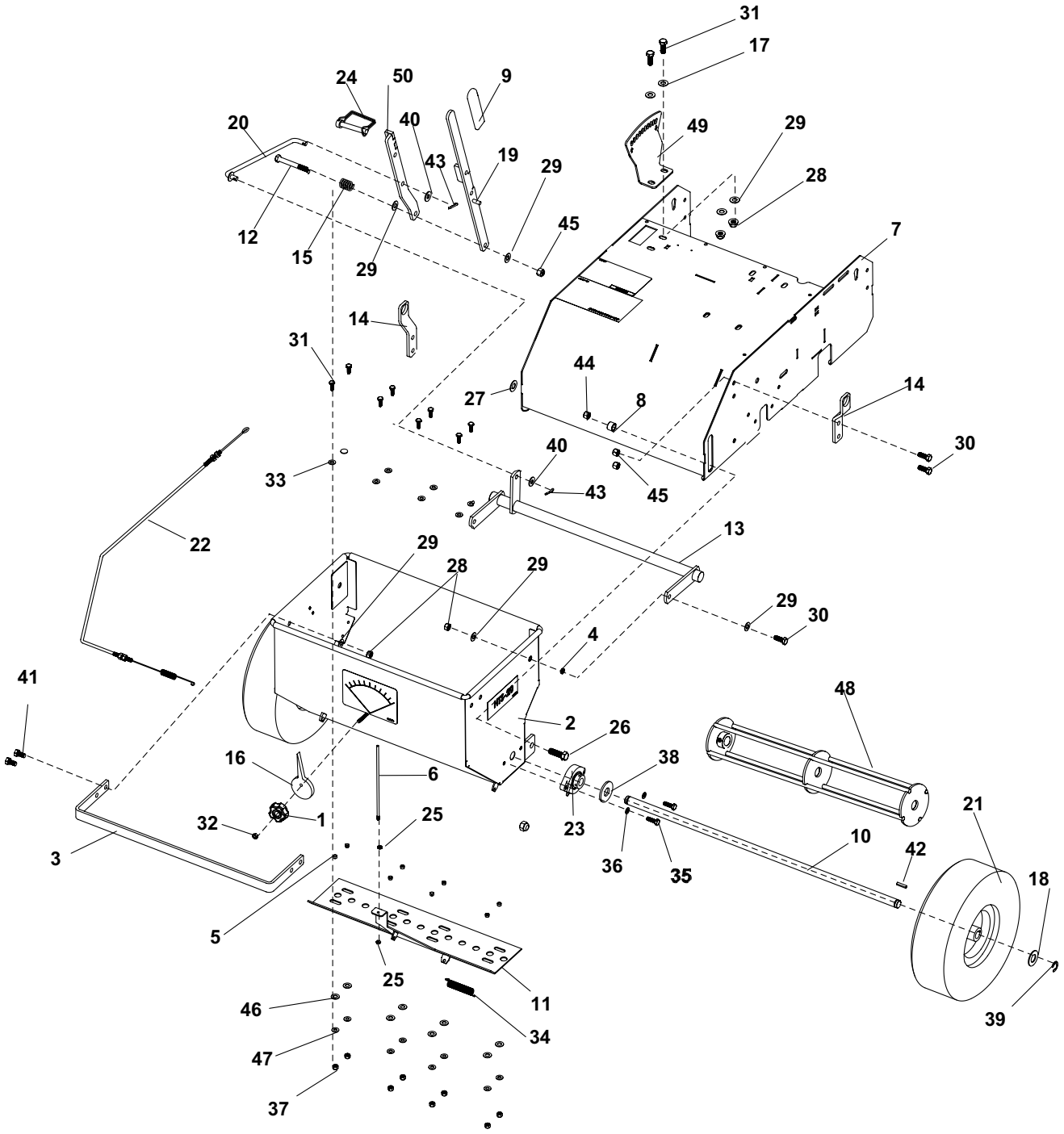
31
17
24
50
9
20
40
49
29
43
19
29
28
12
15
29
45
7
14
31
44
27
8
14
30
40
33
43
45
22
13
29
28
29
29
30
4
41
48
2
26
16
38
6
21
32
1
25
23
10
3
36
35
42
18
5
25
11
46
34
39
47
37

HTS-20HD

FIGURE 4

ITM	PART NO.	DESCRIPTION	QTY
1	4172692	KNOB-5 PRONG 1/4-20	1
2	C400450.17	SEED HOPPER	1
3	4170181.7	BOLT-ON BUMPER	1
4	4170182	BUSHING, HEIGHT CNTRL	2
5	4170183	BUSHING, SEED GATE	8
6	4170184.17	GATE OPERATION FLAG	1
7	4176461	S-MAIN BODY W/LABS HD	1
8	4170185	BUSHING, SEED BOX	2
9	C100007	GRIP, RUBBER	1
10	C400458	SHAFT, KEYED	1
11	C400460	SEED GATE WELDMENT	1
12	C500159	BOLT, 3/8-16 x 3	1
13	C400466.7	HEIGHT CNTRL WLDMT	1
14	C400468.7	HEIGHT CNTRL BRCKT	2
15	C500065	SPRING-SPEED STOP	1
16	C400478.17	SEED FLOW SELECTOR	1
17	C500137	WASHER, 1/4 LOCK	2
18	C400480	WASHER, WHEEL	2
19	C400488.7	DEPTH ADJUST LEVER	1
20	C400490.17	HEIGHT SLCTR WLDMT	1
21	4169760	WHEEL & TIRE 13XX5.0X6	2
22	4169762	CONTROL CABLE, HTS-20	1
23	4169759	BEARING, 3/4" SHAFT	2
24	4170081	PIN / WIRE LOCK	1
25	C100145	NUT, #10-24 HEX	2
26	C500150	BOLT, 1/2-13 x 1-1/2	2
27	C500034	WASHER, 1/2 FLAT	1
28	C500041	NUT, 3/8-16 LOCK	6
29	C500042	WASHER, 3/8" FLAT	8
30	C500043	BOLT, 3/8-16 X 1	6
31	C500029	BOLT, 1/4-20 x 3/4	8
32	C500139	NUT, 1/4-20 LOCK	1
33	C500088	WASHER, 1/4" FLAT	16
34	C100034	SPRING, CLUTCH CABLE	1
35	C500133	BOLT, 5/16-18 x 1	4
36	C500115	WASHER, 5/16 LOCK	4
37	C500068	NUT, 1/4-20 NYLOC	8
38	C500194	WASHER, 3/4 FLAT	2
39	64221-08	E-RING .750	2
40	C500083	WASHER, 5/16 FLAT	1
41	C500177	BOLT, 3/8-16 X 3/4	4
42	C500011	KEY, 3/16 SQUARE X 1	2
43	4170473	PIN, 1/8 X 1 COTTER	1
44	64229-05	NUT-NYLON LOCK 1/2-13	2
45	C500076	NUT, 3/8-16 NYLOC	4
46	64240-07	WASHER, 3/8" NYLON	8
47	4172199	WASHER-6MM	8
48	C400456.7	SEED AGITATOR	1
49	4176463	S-PLATE, DEPTH SLCTR	1
50	C400489.7	STOP, DEPTH ADJUST	1

FIGURE 5

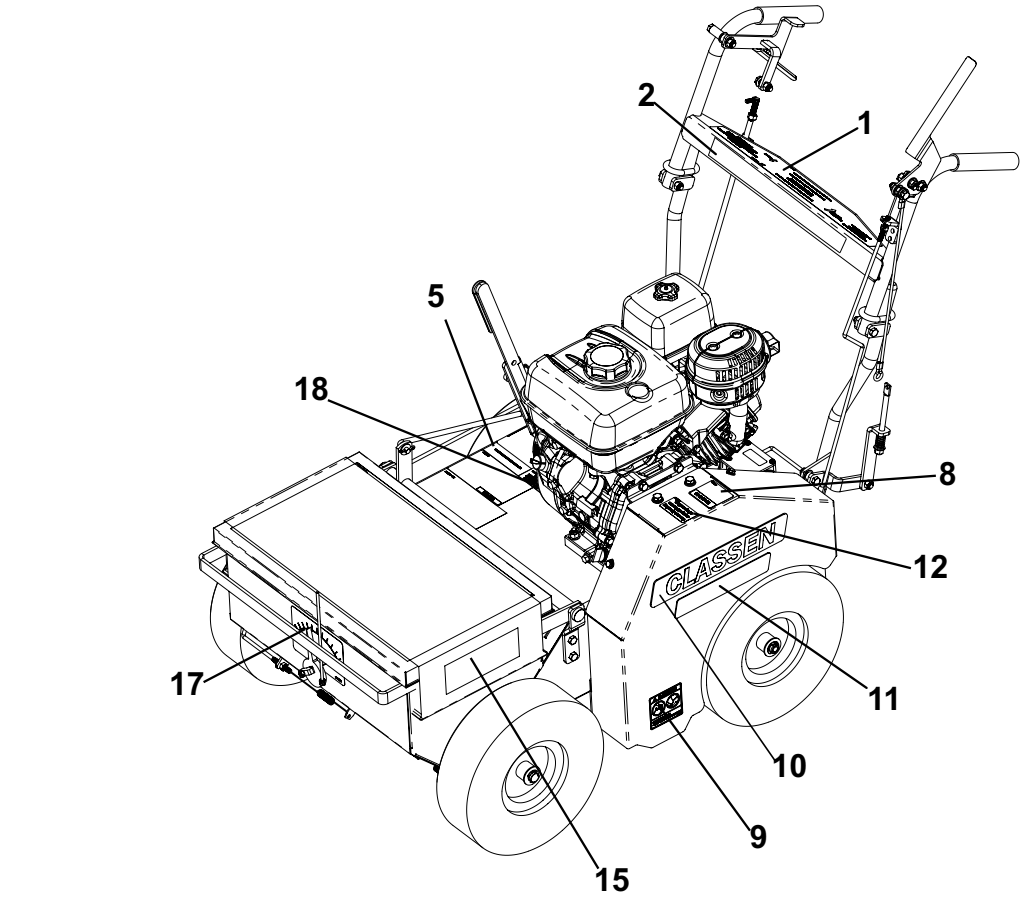

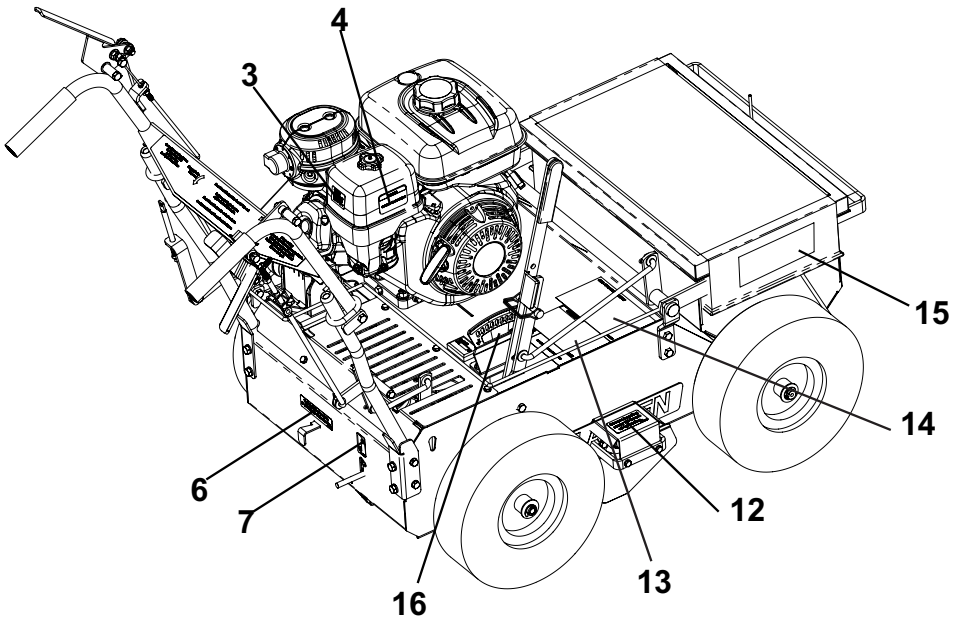

FIGURE 5

ITM	PART NO.	DESCRIPTION	QTY
1	4176202	LABEL, HANDLES	1
2	4173007	DECAL, SM CLASSEN PRO,	2
3	C100060	DECAL, MUFFLER	1
4	C100070	DECAL-CARBON MONOXIDE	1
5	C100504	DECAL, SPARK ARRESTOR	1
6	4176208	LABEL, TRANS ENGMNT	1
7	4176207	LABEL, PARKING BRAKE	1
8	4168760	LABEL WARN-HAND PINCH	1
9	20942	LABEL-DANGER	1
10	4173007	DECAL, CLASSEN BLACK	1
11	4171825	LABEL-PRO	2
12	4176205	LABEL, GREASE BEARING	2
13	4165977	LABEL-READ MAN/SPANISH	1
14	4169927	DECAL,SEED APPL CHART	1
15	C100727	DECAL-HTS-20	2
16	4176203	LABEL, BLADE HT LOWER	1
17	C100726	DECAL,SEEDER GAUGE	1
18	C100505	DECAL, CARB APPROVAL	1

ITM	PART NO.	DESCRIPTION	QTY

Classen Warranty Statement

2-Year Limited Warranty

This Classen Product is warranted against defects in materials and workmanship for a period of two (2) years from the date of purchase from an authorized dealer under the following terms and conditions. Schiller Grounds Care's responsibility under this limited warranty is restricted to repairing or replacing, at its option, any covered part found to be defective in material or workmanship during the warranty period. All parts replaced under warranty will be considered as part of the original product and any warranty on the replaced parts will expire coincidentally with the original product warranty.

SCHILLER GROUNDS CARE, INC. MAKES NO EXPRESS OR IMPLIED WARRANTIES, REPRESENTATIONS, OR PROMISES EXCEPT THOSE CONTAINED HEREIN. THERE ARE NO OTHER WARRANTIES, INCLUDING WARRANTIES OF MERCHANTABILITY AND FITNESS FOR A PARTICULAR PURPOSE. ALL WARRANTIES OTHER THAN THE EXPRESS WARRANTY SET FORTH ABOVE ARE SPECIFICALLY DISCLAIMED. THE DURATION OF ANY IMPLIED WARRANTY, INCLUDING MERCHANTABILITY AND FITNESS FOR A PARTICULAR PURPOSE, IS LIMITED TO THE DURATION OF THIS WRITTEN LIMITED WARRANTY.

To Obtain Warranty Service - Warranty service must be performed by an authorized Classen dealer. To locate a dealer, please visit: www.classenturfcare.com and click on FIND A DEALER. For further assistance, write or email the Technical Services Department of Schiller Grounds Care

Schiller Grounds Care, Inc.
1028 Street Road
Southampton, PA 18966
techservicesupport@schillergc.com

ABOUT YOUR WARRANTY

The warranty period begins on the date of purchase by the original retail or commercial customer from an authorized Classen dealer and is not transferable. Warranty service must be performed by an authorized Classen dealer. If a warranty replacement becomes necessary, the authorized dealer must be prepared to provide the physical component for verification (freight prepaid) upon request from Schiller Grounds Care. Warranty service will be performed without charge to the original purchaser for parts and labor. The original purchaser is responsible for the expense of delivering the equipment, part, or accessory to and from an authorized dealer's service center. The purchaser is responsible for any premium charged for overtime labor requested by the purchaser and for any service and/or maintenance not directly related to any defect covered under this limited warranty. Proof of purchase will be required to substantiate any warranty claim. Without proof of the initial purchase date from an authorized dealer, the manufacturing date of the product will be used to establish the warranty period.

EXCLUSIONS

This warranty only covers defects in materials or workmanship.

Engines and Other Manufacturers - Schiller Grounds Care makes no warranty with respect to engines or engine parts such as spark plugs, lubricants, starters, and carburetors. The engine warranty is covered by the engine manufacturer. Consult the Operator's Manual for the engine provided with your product or ask an authorized dealer for the terms and conditions of these warranties. Schiller Grounds Care makes no warranty with respect to other parts not of its manufacture such as tires, batteries, gearboxes, or similar. These other parts may be covered by the warranties of their respective manufacturers.

Wear Items - This limited warranty does not cover damages or defects from normal wear and tear. This limited warranty does not include routine maintenance and normal maintenance parts, including but not limited to tires, batteries, transmissions, clutches, filters, gearboxes, blades, tines, belts, chains, cables, or bearings.

Negligence and Improper Maintenance or Repair - This limited warranty does not cover any equipment that has been subject to lack of reasonable and proper maintenance, misuse, lack of proper storage, or accidents. This limited warranty does not cover any damage to the equipment that is caused by a freight carrier or is the result of failure to follow the operating instructions within the Owner's Manual. This limited warranty does not cover any defects due to repairs, modifications, or alternations made to the product by anyone other than Schiller Grounds Care or its authorized dealers. In addition, this limited warranty does not cover repairs made necessary due to a lack of proper protection during storage. This limited warranty does not cover damage caused by the use of parts, supplies, or accessories, including, without limitation, filters, spark plugs, carburetors, ignition, drive belts, brakes, gasoline, fuel, oil, or lubricants, which in the reasonable judgment of Schiller Grounds Care, are either incompatible with the product, adversely affect its operation, performance, durability or are other than as recommended in the Operator's Manual or other operational instructions provided by Schiller Grounds Care.

Classen Warranty Statement

Improper Use - This limited warranty does not cover any Classen Product, part, or accessory that (i) has been subject to misuse, abuse, neglect, negligence, or accident, or that has not been assembled, operated, or maintained in accordance with the operating or maintenance instructions specified in the Operator's Manual; or (ii) has been altered or modified so as to adversely affect its operation, performance or durability, or that has been altered or modified in ways not approved by Schiller Grounds Care. To the extent permitted by law, neither Schiller Grounds Care nor any company affiliated with it makes any warranties, representations, or promises as to the quality, performance, or freedom from defect of the Classen Product, part, or accessory covered by this limited warranty. The authorized dealer makes no warranty of its own and such dealer has no authority to make any representation, warranty, or promise on behalf of Schiller Ground Care or to modify the terms or limitations of this limited warranty in any way.

Other Exclusions - This limited warranty does not include reconditioned, refurbished, used, or demonstration equipment. This limited warranty excludes failures due to acts of nature beyond the manufacturer's control.

Extended Warranty - Schiller Grounds Care disclaims responsibility for any separately purchased extended warranty. ALL WARRANTIES OTHER THAN THE EXPRESS WARRANTY SET FORTH ABOVE ARE SPECIFICALLY DISCLAIMED. THE DURATION OF ANY IMPLIED WARRANTY, INCLUDING MERCHANTABILITY AND FITNESS FOR A PARTICULAR PURPOSE, IS LIMITED TO THE DURATION OF THIS WRITTEN LIMITED WARRANTY.

Disclaimer of Consequential Damage - Schiller Grounds Care disclaims any responsibility for incidental or consequential damages including, but not limited to, the expense for gasoline, the expense of delivering the product to an authorized service dealer, the expense of returning the product to the purchaser, mechanic's travel time, telephone charges, rental of a like product during the repair timeframe, travel, loss of revenue, loss of time, or inconvenience. SCHILLER GROUNDS CARE, INC. DISCLAIMS ALL LIABILITY FOR INDIRECT, INCIDENTAL, AND/OR CONSEQUENTIAL DAMAGES IN CONNECTION WITH THE USE OF THE CLASSEN PRODUCTS COVERED BY THIS LIMITED WARRANTY. SOME STATES DO NOT ALLOW LIMITATIONS ON HOW LONG AN IMPLIED WARRANTY LASTS AND/OR DO NOT ALLOW THE EXCLUSION OR LIMITATION OF INCIDENTAL OR CONSEQUENTIAL DAMAGES, SO THE ABOVE LIMITATIONS AND EXCLUSIONS MAY NOT APPLY TO YOU. THIS WARRANTY GIVES YOU SPECIFIC LEGAL RIGHTS, AND YOU MAY ALSO HAVE OTHER RIGHTS WHICH VARY FROM STATE TO STATE.