COMPACT AERATOR

TA18H

OPERATOR'S MANUAL

MAN 4173324
Rev. B

Parts Manual 4173161

SCHILLER GROUNDS CARE

CALIFORNIA

Proposition 65 Warning

Diesel engine exhaust and some of its constituents are known to the State of California to cause cancer, birth defects and other reproductive harm.

⚠ WARNING

The engine exhaust from this product contains chemicals known to the State of California to cause cancer, birth defects or other reproductive harm.

CALIFORNIA

Proposition 65 Warning

Battery posts, terminals, wiring insulation, and related accessories contain lead and lead compounds, chemicals known to the State of California to cause cancer and birth defects or other reproductive harm. **WASH HANDS AFTER HANDLING.**

PRE-DELIVERY CHECK LIST

Check the following before you deliver the Aerator to the customer.

1. Guards and shields fastened in place.
2. Decals fastened and legible.
3. Weight bar installed.
4. Gas lever on engine turned on.
5. All lubrication points greased.
6. 6:1 gearbox oil level.
7. Engine oil level.
8. Air cleaner.
9. Touch up scratches.
10. Chain(s) tight.
11. Lowering handle working properly.
12. Control handle(s) working to tighten V-belt(s).
13. Add fuel, start engine, test run.

DATE SET UP _____/_____/_____

DELIVERY CHECK LIST

Review the operators manual with the customer.

1. Schiller Grounds Care, Inc. warranty.
2. Safe operation and service.
3. How to use controls.
4. Operating the machine correctly.
5. Transporting the Aerator.
6. Correct fuel and lubricants.
7. Daily and periodic inspections.
8. Changing oil after break-in period.
9. Servicing the Aerator regularly and correctly.
10. Schiller Grounds Care, Inc. parts and service.
11. Give the customer the operators manual and encourage customer to read it.

DATE DELIVERED _____/_____/_____

SIGNATURE _____

OWNER'S RECORD

DATE PURCHASED_____

AERATOR MODEL NUMBER_____

AERATOR SERIAL NUMBER _____

ENGINE MODEL NUMBER _____

ENGINE SERIAL NUMBER_____

IMPORTANT MESSAGE

Thank you for purchasing this Classen product. You have purchased a world class product, one of the best designed and built anywhere.

This product comes with Parts and Operator's Manuals. The useful life and good service you receive from this product depends to a large extent on how well you read and understand this manual. Treat this product properly and adjust it as instructed, and it will give you many years of reliable service.

See a Classen dealer for any service or parts needed. Classen service ensures that you continue to receive the best results possible from Classen products. You can trust Classen replacement parts because they are manufactured with the same high precision and quality as the original parts.

Classen designs and builds its equipment to serve many years in a safe and productive manner. For longest life, use this product only as directed in the manual, keep it in good repair and follow safety warnings and instructions. You'll always be glad you did.

Classen
1028 Street Road
Southampton, PA 18966

TABLE OF CONTENTS **FIGURES** **PAGE**

SAFETY....4-7
LABELS....8
CONTROLS....9
OPERATION....10-11
MAINTENANCE / STORAGE....12-13
WARRANTY.... BACK COVER

NOTICE !!!

Unauthorized modifications may present **extreme** safety hazards to operators and bystanders and could also result in product damage.

Classen strongly warns against, rejects and disclaims any modifications, add-on accessories or product alterations that are not designed, developed, tested and approved by Classen Engineering Department. Any Classen product that is altered, modified or changed in any manner not specifically authorized after original manufacture–including the addition of "after-market" accessories or component parts not specifically approved by Classen–will result in the Classen Warranty being voided.

Any and all liability for personal injury and/or property damage caused by any unauthorized modifications, add-on accessories or products not approved by Classen will be considered the responsibility of the individual(s) or company designing and/or making such changes. Classen will vigorously pursue full indemnification and costs from any party responsible for such unauthorized post-manufacture modifications and/or accessories should personal injury and/or property damage result.

This symbol means:
ATTENTION!
BECOME ALERT!

Your safety and the safety of others is involved.

Signal word definitions:

The signal words below are used to identify levels of hazard seriousness. These words appear in this manual and on the safety labels attached to Classen machines. For your safety and the safety of others, read and follow the information given with these signal words and/or the symbol shown above.

⚠ DANGER

DANGER indicates an imminently hazardous situation which, if not avoided, **WILL** result in death or serious injury.

⚠ WARNING

WARNING indicates a potentially hazardous situation which, if not avoided, **COULD** result in death or serious injury.

⚠ CAUTION

CAUTION indicates a potentially hazardous situation which, if not avoided, **MAY** result in minor or moderate injury. It may also be used to alert against unsafe practices or property damage.

CAUTION

CAUTION used without the safety alert symbol indicates a potentially hazardous situation which, if not avoided, **MAY** result in property damage

Schiller Grounds Care, Inc.

1028 Street Road
Southampton, PA 18966 U.S.A
Phone: 215-357-5110
Fax: 215-357-8045

MODEL NUMBER

SERIAL NUMBER

MODEL NUMBER: This number appears on sales literature, technical manuals and price lists.

SERIAL NUMBER: This number appears only on your machine. It contains the model number followed consecutively by the serial number. Use this number when ordering parts or seeking warranty information.

Machine Preparation

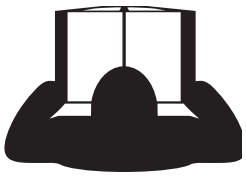

Operator preparation and training
Read the Operation & Safety Manual

- If an operator or mechanic cannot read English, it is the owner's responsibility to explain this material to them. If any portion of this material is unclear, contact your factory representative for clarification.
- Become familiar with the safe operation of the equipment, operator controls and safety signs. Be prepared to stop the engine quickly in an emergency. Do not operate or allow another person to operate this machine if there are any questions about safety.
- All operators and mechanics should be trained. The owner is responsible for training the users.
- Wear appropriate clothing, including safety goggles or safety glasses with side shields when operating. Do not operate barefoot or wearing open sandals. Long hair, loose clothing or jewelry may get tangled in moving parts.
- Wear hearing protection.
- Operate only in daylight or good artificial light.
- Wear safety glasses.
- Never allow underage children, unskilled or improperly trained people to operate this equipment. Local regulations can restrict the age of the operator.
- Keep warning labels and this operator's manual legible and intact. Replacement labels and manuals are available from the factory.
- Do not operate machine while under the influence of drugs or alcohol.
- The owner/user can prevent and is responsible for accidents or injuries occurring to themselves, other people or property.
- Be sure you know how to stop the aerator at a moments notice.

Site preparation and circumstances

- Evaluate the terrain to determine how to safely perform the job. Only use accessories and attachments approved by the manufacturer.
- Clear the area to be aerated of objects such as rocks, toys, wire or other debris that may be thrown or get tangled in the aerator.
- Identify and mark objects to be avoided such as sprinkler heads, stakes, water valves, etc.
- Be sure the area is clear of pets and people, especially young children. Never assume they will remain where you last saw them. Stop the machine if any enter the area.
- Aerate only in daylight or in good artificial light.

Machine Preparation

- Do not tamper with or defeat safety devices. Keep guards, shields and interlock safety devices in place and in proper working condition. They are for your protection.
- Keep all fasteners such as nuts, bolts and pins well secured.
- Visually inspect tines for wear or damage. Replace worn or damaged tines and bolts.
- Verify that machine and attachments, if any, are in good operating condition.
- Do not engage tines until ready to aerate.

OPERATING SAFELY

In General

- Use extra care when loading or unloading the machine into a trailer or truck. Never pick up or carry the machine when the engine is running.
- Use caution when making turns and crossing roads and sidewalks. Stop tines when not aerating.
- Do not run the engine in an enclosed area where dangerous carbon monoxide fumes can collect.
- Never leave a machine unattended. Always turn off tines and stop engine when leaving the operator position.
- Use extreme caution when reversing or pulling machine towards you.
- Clean/remove debris from mufflers and engine to help prevent fires.

Operating On Slopes

Use Extra Care When Working On Slopes

- Do not operate on slopes if uneasy or uncertain. Ultimate responsibility for safe operation on slopes rests with the operator.
- Do not operate on steep slopes.
- Keep all movement on slopes slow and gradual.
- Do not aerate near drop-offs, ditches or embankments. The machine could suddenly turn over if a wheel runs over the edge or an edge caves in.
- Do not turn on slopes unless necessary, and then turn slowly and downhill when possible.
- Be sure of your footing on slopes.

Interrupting Operation

- Before leaving the operator's position:
  — Park on level ground.
  — Release control handle.
  — Shut off the engine.
- Release control handle and lift up on the tine lowering handle:
  — when not aerating;
  — for transport;
  — when crossing surfaces other than grass.
- Release control handle, wait until tines stop moving and stop engine:
  — before refueling;
  — before making tines adjustment.
- Release control handle, wait for tines to stop, stop the engine and disconnect spark plug wires:
  — before clearing blockages;
  — before checking, cleaning or working on the machine;
  — after striking a foreign object. Inspect the machine for damage and make repairs before restarting;
  — if the machine begins to vibrate abnormally: shut off machine immediately. Inspect and make repairs as needed before restarting;
  — except for repairs or adjustments as specifically noted, such as for carburetor adjustment, where the engine must be running. Keep hands and feet clear of moving parts in these circumstances.
- Allow the tines to come to a complete stop when stopping operation to clear blockages, unclog, inspect the machine, do maintenance or repair.
- Reduce the throttle setting during engine shut-down and, if the engine is provided with a shut-off valve, turn the fuel off at the conclusion of operation.

MAINTENANCE SAFETY

In general

- Maintain machine according to manufacturer's schedule and instructions for maximum safety and best results.
- Park machine on level ground.
- Never allow untrained personnel to service machine.
- Guards should only be removed by qualified maintenance technician for maintenance/service. Replace when work is complete.
- Adjust or repair only after the engine has been stopped and the tines has stopped moving.
- Disconnect spark plug wire(s) before doing any maintenance.
- Replace parts if worn, damaged or faulty. For best results, always replace with parts recommended by the manufacturer.
- Do not dismantle the machine without releasing or restraining forces which may cause parts to move suddenly.
- Provide adequate support, e.g. jack stands for lifted machine or parts if working beneath.
- Do not put hands or feet near or under rotating parts.
- Clean up spilled oil or fuel thoroughly.
- Replace faulty mufflers.
- To reduce fire hazards, keep the engine, muffler, and fuel storage area free of grass, leaves, debris buildup or grease.

AERATOR

Tines

The aerator tines are sharp and can cut. Use extra caution when handling. Remove obstructions with care. Wrap the tines or wear gloves.

- Only replace tines. Never straighten or weld.
- Keep other persons away from tines.

Fuel

- Petrol (gasoline) and diesel fuels are flammable; petrol (gasoline) vapors are explosive. Use extra care when handling.
  - Store only in containers specifically designed for fuel.
  - When refueling or checking fuel level:
  - Stop the engine and allow to cool;
  - Do not smoke;
  - Refuel outdoors only;
  - Use a funnel;
  - Do not overfill;
  - If fuel is spilled, do not attempt to start the engine until the spill is cleaned up and vapors have cleared.
  - Replace caps on fuel containers and tanks securely.

Sparks from static electricity can start fires or cause explosions. Flowing fuel can generate static electricity. To prevent static electricity sparks:

- Keep fuel containers electrically grounded. Do not fill containers in a vehicle or on a truck or trailer bed with a plastic liner. Fill containers on the ground away from the vehicle.
- When practical, remove petrol (gas) powered equipment from the truck or trailer and refuel it on the ground. If equipment must be refueled on the truck or trailer, refuel from a portable container rather than a dispenser nozzle.
- Keep the dispenser nozzle in contact with the rim of the fuel tank or container opening until fueling is complete. Do not use a nozzle lock-open device.

Storage Safety

- Stop the engine and allow to cool before storing.
- Drain the fuel tank outdoors only.
- Store fuel in an approved container in a cool, dry place.
- Keep the machine and fuel containers in a locked storage place to prevent tampering and to keep children from playing with them.
- Do not store the machine or fuel container near heating appliances with an open flame, such as a water heater, or an appliance with a pilot light.
- Keep gasoline storage area free of grass, leaves and excessive grease to reduce fire hazard.
- Clean grass and debris from cutting units, drives, mufflers and engine to help prevent fires.

.

AERATOR

DANGER
-ROTATING BLADE
-KEEP HANDS AND FEET AWAY

WARNING
BEFORE STARTING:
-Read and understand Operator manual and labels.
-Wear hearing and eye protection.
-Replace labels and Operator manual if lost or damaged.
ADVERTENCIA
Antes de comenzar:
-Lea y entienda el manual del operador y las etiquetas.
-Pide que alguien lea y explique el manual y las etiquetas a usted si usted no lee Inglés.
-Use protección ocular y auditiva.
-No haga funcionar sin los protectores en su lugar.
-Pare el motor antes de dar servicio
-La gente a más durante la operación.
4165977

WARNING
- ROTATING PARTS.
- DO NOT OPERATE WITH COVER REMOVED
4168760

AERATOR

FUEL SHUT OFF (A) - Move to the “OFF” position to shut off the fuel whenever transporting the machine by trailer, truck or during storage. Move to the “ON” position before starting the engine.

SWITCH (B) -
Move to the “OFF” position to stop the engine.
Move to the “ON” position before starting engine.

CHOKE (C) -
Move to the “CHOKE” position to apply the choke.
Move to the “RUN” position to remove the choke.

THROTTLE (D) - Push throttle forward.

CONTROL HANDLE (E) -
Squeeze control handle completely to engage wheels and tines to propel unit forward.

TINE HANDLE (F) - Push down on the tine lowering handle to place tines in the turf. Pull up on the tine handle to raise the tines out of the turf for transport.

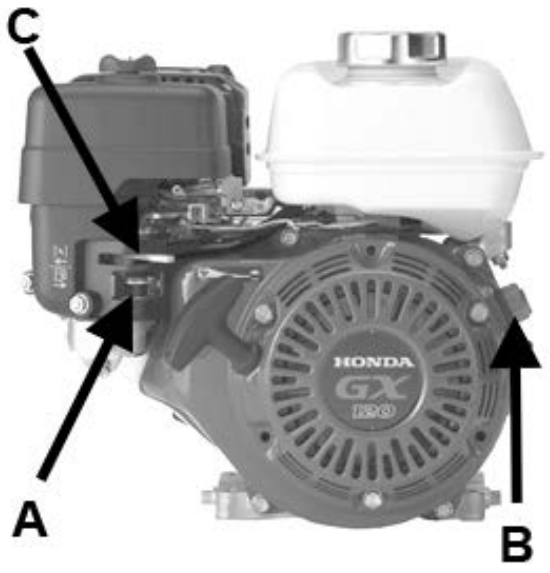

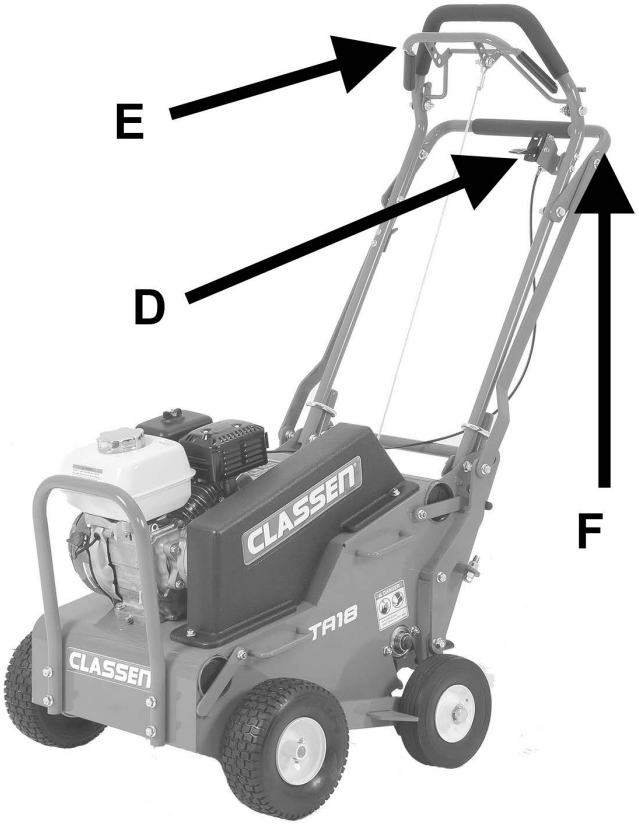

PRE-OPERATION CHECK LIST
(Operator's responsibility)

- Review and follow all safety rules and safety decal instructions.
- Check that all safety decals are installed and in good condition. Replace if damaged.
- Check to make sure all shields and guards are properly installed and in good condition.
- Check that all hardware is properly installed and secured.
- Check to be sure engine is free of dirt and debris. Pay particular attention to the cooling fins, governor parts and muffler. Clean air intake screen. Check air cleaner; service is necessary.
- Inspect area. Remove stones or other hard objects that might cause damage.
- Check that there are no underground utilities and sprinkler heads in work area.
- Check all lubrication points and grease as instructed in manual.
- Perform a functional check of the safety interlock system each time you operate the unit. If it doesn't work, repair before using the machine.

READ SAFETY SIGNS

⚠ WARNING

ALL GUARDS MUST BE IN PLACE WHILE MACHINE IS IN OPERATION.

⚠ WARNING

KEEP HANDS AND FEET AWAY FROM MOVING PARTS.

BEFORE STARTING THE ENGINE

1. Be familiar with the controls, how each functions, and what each operates.
2. Check engine oil level. Add oil if necessary, following the engine manufacturer's recommendations. Refer to engine manual supplied with machine.

   Engine Oil Level Check

   a. BEFORE CHECKING ENGINE: make certain the engine is level the engine switch is in the OFF position.
   b. Remove the filler cap/dipstick and wipe it clean.
   c. Insert and remove the dipstick without screwing it into the filler neck. Check the oil level shown on the dipstick.
   d. If the oil level is low, fill to the edge of the oil filler hole with the recommended oil. SAE 10W-30 is recommended for general use. Refer to engine oil recommendations in engine manual for other viscosities and information.
   e. Screw in the filler cap/dipstick securely.
3. If applicable, check engine crankcase and gear reduction case oil levels with the engine resting in a level position. Add oil if necessary. (Refer to engine manufacturer's manual for the correct type and amount of oil.
4. Open the fuel valve.
5. Fill the fuel tank with the amount and type of fuel recommended by the engine manufacturer.

Start Engine Safely

Make sure hands and feet are out of the way of moving parts when starting engine.

Starting Engine

1. Turn fuel cock to the "open" position.
2. Turn choke on (closed).
3. Turn ignition switch to "on".
4. Pull recoil starter rope until engine starts.
5. After engine is warm, turn off choke (open).
6. Allow engine to run one minute before aerating.
7. Check engine rpm setting before operating. DO NOT exceed 3600 rpm.

Transporting Aerator

1. Raise tines before transporting unit across surfaces or before transporting from one work area to another by lifting up on the lowering handle.
2. Turn choke on (closed).
3. Turn ignition switch to "on".
4. Pull recoil starter rope until engine starts.
5. After engine is warm, turn off choke (open).
6. Allow engine to run one minute before aerating.
7. Check engine rpm setting before operating. DO NOT exceed 3600 rpm.

AERATOR

WARNING

Operating Aerator

1. Start engine.
2. Make sure the rear tires are in the up position (tines not touching ground). Slowly pull back on the control handle(s). Figure 1

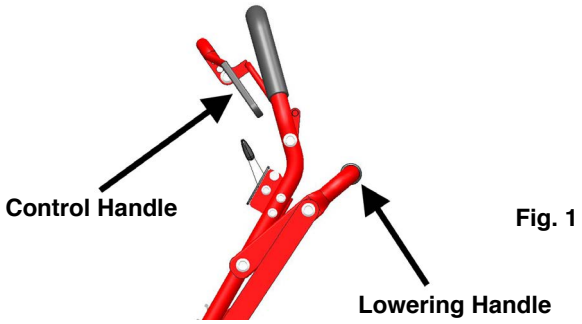

Fig. 1

3. Move aerator to the work area.
4. Release control handle and push down on lowering handle putting tines in the turf.
5. Pull back slowly on the control handle to begin aerating. For maximum penetration into turf, apply downward pressure on handle. This model has three tine hubs that drive independently to allow for easier turning.
6. When finished aerating, release control handle, wait for tines to stop moving, pull up on lowering handle to remove tines from turf and move wheels into transport position.

Stopping Engine

1. Release control handles.
2. Turn off ignition switch.

Practice Safe Maintenance

Keep all machine parts in good condition and fastened in place. Fix damages immediately. Replace worn or broken parts. Whenever you work on the machine, disconnect spark plug wire When replacement parts are required, use genuine Schiller Grounds Care, Inc. parts or parts with equivalent characteristics, including type, strength and material. Failure to do so may result in product malfunction and possible injury to the operator and/or bystanders.

Carbon monoxide present in the exhaust is an odorless and deadly gas. Never start or run the engine inside where exhaust fumes can collect.

Provide enough fresh air to keep fumes from getting too strong. Replace any warning decal that becomes illegible immediately.

AERATOR MAINTENANCE

TO KEEP THE AERATOR IN GOOD OPERATING CONDITION, PERFORM THE FOLLOWING:

- When replacement parts are required, use genuine Classen parts or parts with equivalent characteristics including type, strength, and material. Failure to do so may result in product malfunction and possible injury to the operator and/or bystanders.
- Any warning decal that becomes illegible should be replaced immediately.
- Do not operate equipment without shield(s) in place. Do not make any adjustments or perform any maintenance while the engine is running.
- Thoroughly clean all tines inside and out when aerating is completed and apply a light coat of oil to prevent rust on tines.
- Always lubricate Aerator each time it is put into service. Wipe off lubrication fittings before and after each lubrication. The number of lubrication fittings vary depending on model of Aerator.
- Keep drive belt(s) free of oil and dirt.

⚠ WARNING ⚠

SAFETY WARNING: TO PREVENT POSSIBLE EXPLOSION OR IGNITION OF VAPORIZED FUEL, DO NOT STORE EQUIPMENT WITH FUEL IN TANK OR CARBURETOR OR NEAR OPEN FLAME (I.E. FURNACE, WATER HEATER, PILOT LIGHT).

STORAGE INSTRUCTIONS

Before the Aerator is put into storage for any period exceeding 30 days, the following steps should be taken.

1. Drain all fuel from fuel tank and fuel lines.
2. Start engine and run until all fuel is used from carburetor float bowl.
3. While engine is still warm, drain the crankcase oil and replace with the proper weight oil corresponding to the season the Aerator will next be used.
4. Remove the spark plug and squirt a small quantity of engine oil into the cylinder. Turn the engine over a few times to distribute that oil.
5. Lubricate all lubrication fittings.

To put Aerator into operation after an extended storage:

1. Check for loose parts and tighten if necessary.
2. Check for cracked or broken tines and replace.
3. Fill fuel tank.
4. Check engine and gear reduction case oil levels (with engine in a level position).
5. Start engine.
6. Check for fuel leaks.
7. Check operation of control handle(s) to make sure unit stops when lever is released forward.
8. Aerator is equipped with fuel shut-off valve, close valve before transporting.

AERATOR

LUBRICATION
Grease the three tine bearings at the start of the season and every 25 hours.

ENGINE MAINTENANCE
(Refer to engine manufacturer's owners manual) Check engine and gear reduction case oil level with engine resting in a level position. Inspect air filter element and replace if necessary.

CLUTCH CABLE
The belt should be fully de-clutched from the engine pulley when bail is released. If cable needs to be tightened, remove nut on bail and raise connecting bolt to the 2nd or 3rd hole as seen in Figure 2

CHAIN
The roller chain should have 1/8" - 1/4" deflection at the center point between the rear tine shaft sprocket and the front wheel shaft sprocket. To adjust, tighten or loosen the 3/8" bolt under the pulley guard as seen in Figure 3.

TINE DEPTH CONTROL
The depth control that the tine can penetrate the ground can be controlled using the depth control bolts on both sides of the unit as shown in Figure 4. Set both bolts to the desired depth by turning nylock nut to proper location and locking in with the other nut. Depth can be set from 1-1/4" to 3".

Fig. 2

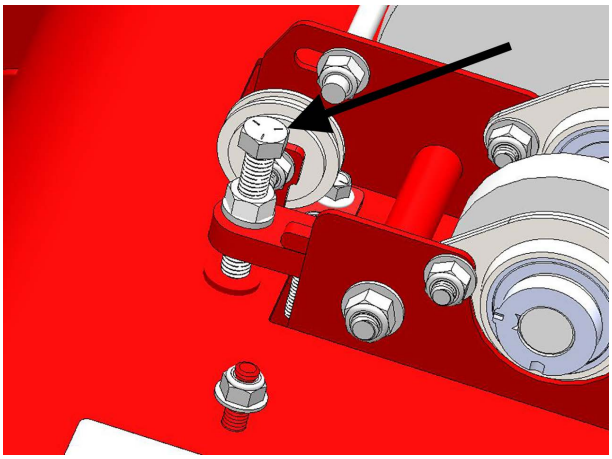

Fig. 3

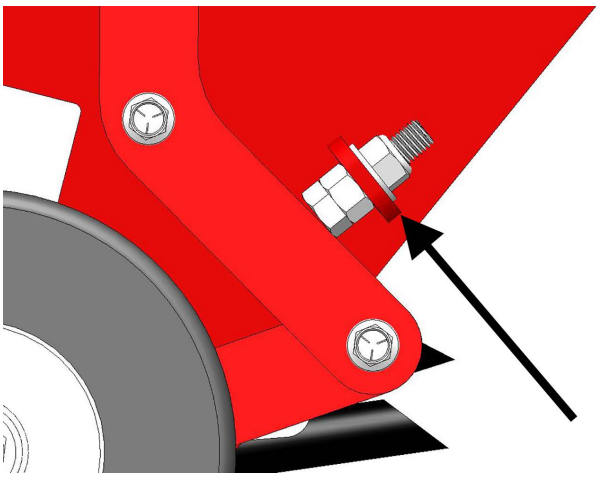

Fig. 4